MHC-5900/E90X

SERVICE MANUAL

AEP Model
UK Model
MHC-5900
E Model
Australian Model
Tourist Model
MHC-E90X

These system are composed of following models. As for the service manual, it is issued for each component model, then, please, refer to it.

COMPONENT MODEL NAME FOR THESE SYSTEM

	MHC-E90X	MHC-5900
	E, Australian, Malaysia, Saudi Arabia, Singapore, Tourist	AEP, UK
TUNER CD PLAYER	HCD-H5900	
INTEGRATED STEREO AMPLIFIER	TA-H5900	
DIGITAL CONTROL AMPLIFIER	SEQ-H5900	
STEREO CASSETTE DECK	TC-H5900	
SPEAKER SYSTEM	SS-H5900	—

SPECIFICATIONS

Destination	Power requirements	Power Consumption
UK	240 V AC, 50 Hz	215 W
AEP	220 – 230 V AC, 50/60 Hz	215 W
EXCEPT AEP, UK	110 – 120 V or 220 – 240 V AC Adjustable, 50/60 Hz	215 W

Design and specifications subject to change without notice.

MINI Hi-Fi COMPONENT SYSTEM

SONY®

PARTS LIST

NOTE:
- Items marked "*" are not stocked since they are seldom required for routine service. Some delay should be anticipated when ordering these items.

- Abbreviation
  AUS: Australian
  MY : Malaysia
  EA : Saudi Arabia
  SP : Singapore
  JE : Tourist

The components identified by mark ⚠ or dotted line with mark. ⚠ are critical for safety. Replace only with part number specified.

Ref. No.	Part No.	Description	Remark
	1-467-478-11	REMOTE COMMANDER (RM-S770X)	
	1-501-369-11	ANTENNA (AEP, UK)	
	1-501-374-11	ANTENNA LOOP	
	1-501-659-11	ANTENNA (FM) (EXCEPT AEP, UK)	
⚠	1-556-280-21	CORD, POWER (E, JE)	
⚠	1-569-007-11	ADAPTOR, CONVERSION (E, JE)	
⚠	1-569-008-11	ADAPTOR, CONVERSION (MY, EA, SP)	
⚠	1-575-131-11	CORD, POWER (AEP, MY, EA, SP)	
⚠	1-590-866-21	CORD, POWER (UK)	
	1-696-741-11	CORD WITH CONNECTOR	
⚠	1-751-015-11	CORD, POWER (AUS)	
⚠	1-751-207-11	CORD, POWER (CORD SET) (EXCEPT UK)	
	1-765-418-11	CORD CONNECTION (R/B)	
	1-765-419-11	CORD CONNECTION (W/B)	
⚠	1-765-425-21	CORD, POWER (UK)	
	3-757-491-11	MANUAL, INSTRUCTION (ENGLISH, FRENCH, SPANISH, PORTUGUESE) (AEP, UK)	
	3-757-491-41	MANUAL, INSTRUCTION (GERMAN, DUTCH, SWEDISH, ITALIAN) (AEP)	
	3-757-491-61	MANUAL, INSTRUCTION (ENGLISH, FRENCH, SPANISH, CHINESE) (EXCEPT AEP, UK)	
	4-956-911-11	LID, SLIDE (FOR RM-S770X)	
*	4-962-379-01	CUSHION, CQ (FRONT) (HCD, SEQ, TC) (EXCEPT AEP, UK)	
*	4-962-380-21	CUSHION, CQ (REAR) (HCD, SEQ, TC) (EXCEPT AEP, UK)	
*	4-965-521-01	INDIVIDUAL CARTON (EXCEPT AEP, UK, AUS)	
*	4-965-523-01	INDIVIDUAL CARTON (AUS)	
*	4-967-823-01	CUSHION, UPPER (HCD, SEQ, TA, TC) (AEP, UK)	
*	4-967-824-01	CUSHION, LOWER (HCD, SEQ, TA, TC) (AEP, UK)	
*	4-967-826-01	CUSHION, UPPER (SEQ, TA, TC) (AEP2)	
*	4-967-827-01	CUSHION, LOWER (SEQ, TA, TC) (AEP2)	
*	4-967-828-01	INDIVIDUAL CARTON (AEP, UK)	
*	4-967-829-01	INDIVIDUAL CARTON (AEP2)	

Note:

AEP2 model: Model for Scandinavian countries, Switzerland, Spain and Portugal

English
94E0575-1D
Printed in Japan
© 1994. 5

Sony Corporation
Consumer A&V Products Company
Home A&V Products Div.

9-959-583-11

Published by Home A&V Products Div.
Quality Engineering Dept.

TC-H5900

SERVICE MANUAL

AEP Model
UK Model
E Model
Australian Model
Tourist Model

TC-H5900 is the integrated stereo amplifier section in the HiFi component system MHC-5900/E90X.

Model Name Using Similar Mechanism	TC-H4900
Tape Transport Mechanism Type	DECK A :TCM-190RA12AL DECK B :TCM-190RB12AL

SPECIFICATIONS

Recording system
4-track 2-channel stereo
Frequency response
(DOLBY NR OFF)
40 – 13,000 Hz (±3 dB), using Sony TYPE I cassette
40 – 14,000 Hz (±3 dB), using Sony TYPE II cassette
40 – 15,000 Hz (±3 dB), using Sony TYPE IV cassette
Wow and flutter
0.1% WRMS ±0.3% (DIN)
Dimensions
Approx. 225 x 125 x 230 mm (w/h/d)
(8 7/8 x 5 x 9 1/8 inches)
Mass: Approx. 2.9 kg
(6 lb 7 oz)

Dolby noise reduction manufactured under license from Dolby Laboratories Licensing Corporation.
"DOLBY" and the double-D symbol ⧈ are trademarks of Dolby Laboratories Licensing Corporation.

STEREO CASSETTE DECK

SONY®

TABLE OF CONTENTS

Section	*Title*	*Page*
Specifications		1
Service Note		2
1.	**GENERAL**	
	Index to Parts and Controls	3
2.	**DISASSEMBLY**	4
3.	**MECHANICAL ADJUSTMENTS**	6
4.	**ELECTRICAL ADJUSTMENTS**	6
5.	**DIAGRAMS**	
5-1.	Block Diagram	11
5-2.	Main Section Printed Wiring Boards	15
5-3.	Main Section Schematic Diagram	20
5-4.	Panel/Power Section Schematic Diagram	23
5-5.	Panel/Power Section Printed Wiring Boards	27
5-6.	IC Pin Functions	29
6.	**EXPLODED VIEWS**	32
7.	**ELECTRICAL PARTS LIST**	36

SAFETY-RELATED COMPONENT WARNING!!

COMPONENTS IDENTIFIED BY MARK ⚠ OR DOTTED LINE WITH MARK ⚠ ON THE SCHEMATIC DIAGRAMS AND IN THE PARTS LIST ARE CRITICAL TO SAFE OPERATION. REPLACE THESE COMPONENTS WITH SONY PARTS WHOSE PART NUMBERS APPEAR AS SHOWN IN THIS MANUAL OR IN SUPPLEMENTS PUBLISHED BY SONY.

SERVICE NOTE

- **Power Supply Used Servicing**

  This unit does not have its own power supply. As it works on the power supplied from the amplifier (TA-H5900) and equalizer (SEQ-H5900) used for this series, connect this amplifier when servicing the unit (conduction repair, etc.).

Notes on chip component replacement

- Never reuse a disconnected chip component.
- Notice that the minus side of a tantalum capacitor may be damaged by heat.

This section is extracted from MHC-5900 instruction manual.

Index to Parts and Controls

Refer to the pages indicated in parentheses for details on how to use the controls. Controls with an asterisk have indicators on themselves.

Front Panel

Tape player section

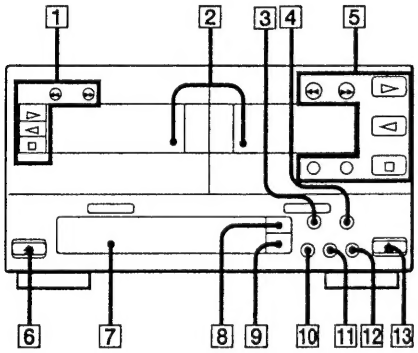

1 Tape operating buttons (for deck A)
- ▷ (front side play)
- ◁ (reverse side play)
- □ (stop)
- ▶▶ (fast rightward and AMS**)
- ◀◀ (fast leftward and AMS**)

2 Cassette compartments
3 CD SYNCHRO button
4 DUBBING MODE button
5 Tape operating buttons (for deck B)
- ▷ (front side play)
- ◁ (reverse side play)
- □ (stop) (13)
- ▶▶ (fast rightward and AMS**)
- ◀◀ (fast leftward and AMS**)
- ● REC (recording)
- ❚❚ PAUSE

**AMS: Automatic Music Sensor

6 ⏏ button (for deck A)
7 Display window
8 COUNTER A/B button
9 RESET button
10 DOLBY NR button
11 DIRECTION MODE button
12 O MUTE button
13 ⏏ button (for deck B)

Display Window

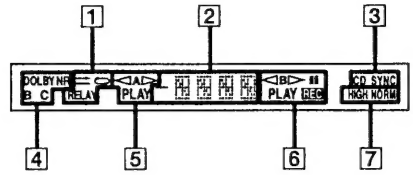

1 Direction mode indication
2 Tape counter indication
3 CD SYNC (synchro) indication
4 Dolby NR indication
5 Deck A status indication
6 Deck B status indication
7 Dubbing mode indication

Remote commander RM-S770X

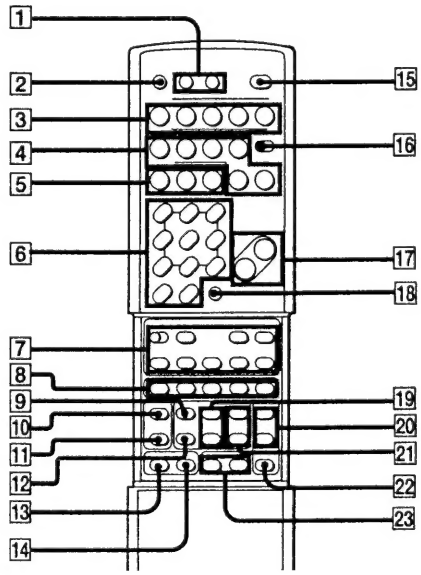

1 TAPE DECK A/B buttons
2 SLEEP button
3 CD/MD operating buttons
4 Cassette deck operating buttons
5 Tuner operating buttons
6 CD/Tuner/numeric buttons
7 VCR operating buttons
8 TV operating buttons
9 PRO LOGIC button
10 AUDIO FUNCTION button
11 VIDEO FUNCTION button
12 TEST TONE button
13 CHECK button
14 CLEAR button
15 SYSTEM POWER switch
16 CD/MD switch
17 VOLUME +/– buttons
18 MUTING button
19 REAR LEVEL +/– buttons
20 MENU 1, 2 button
21 CENTER LEVEL +/– buttons
22 DIRECT button
23 BALANCE L/R button

SECTION 2
DISASSEMBLY

Note: Follow the disassembly procedure in the numerical order given.

[FRONT PANEL ASSEMBLY]

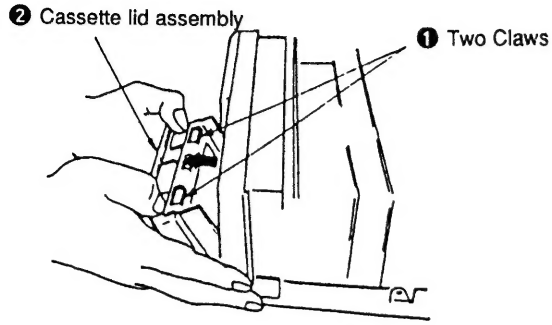

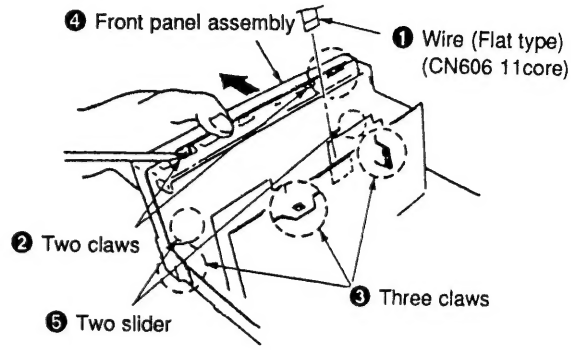

[SW (A), (B) BOARD]

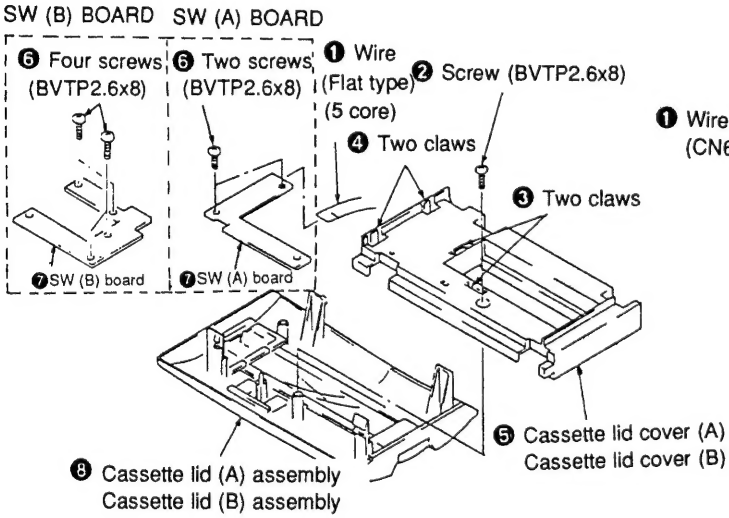

[MD BLOCK]

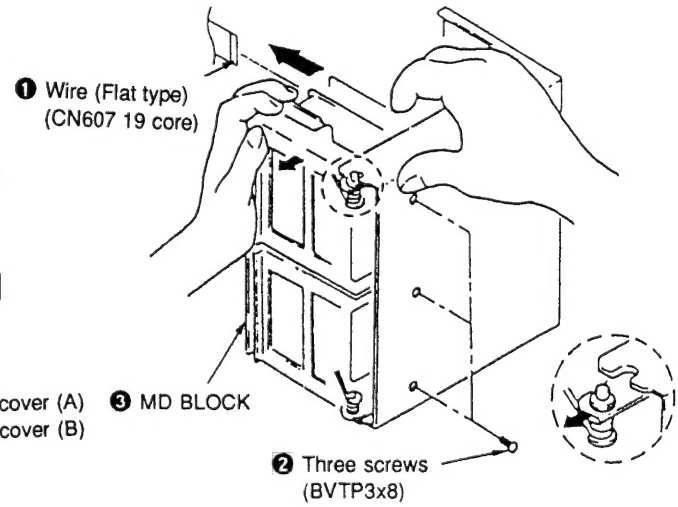

[CASSETTE RETAINER]

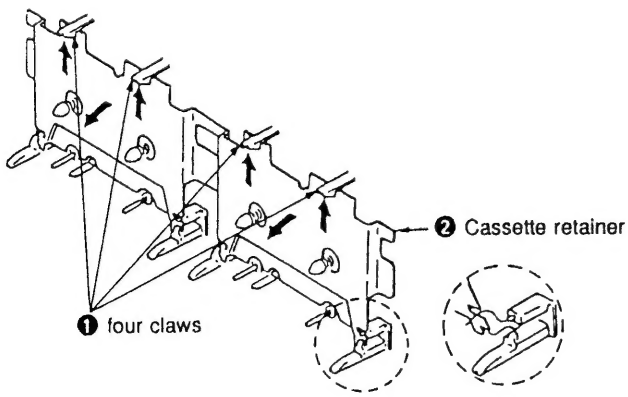

[MECHANISM DECK]

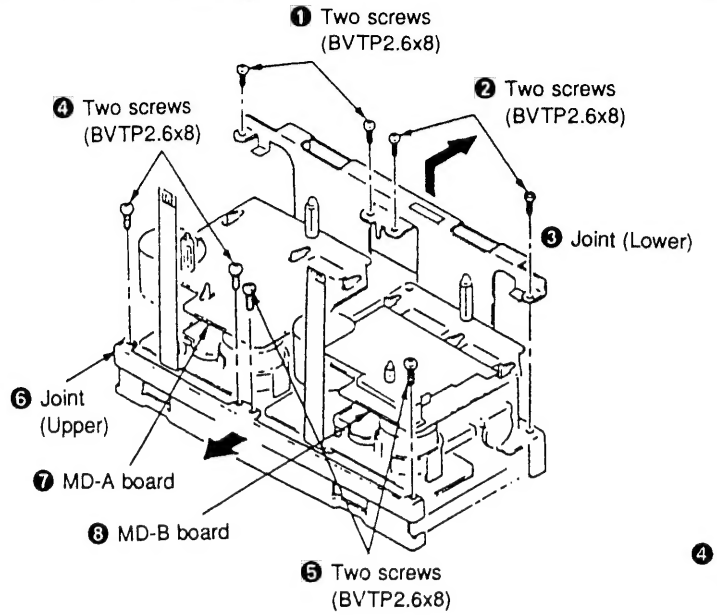

[HEAD BASE ASSEMBLY]

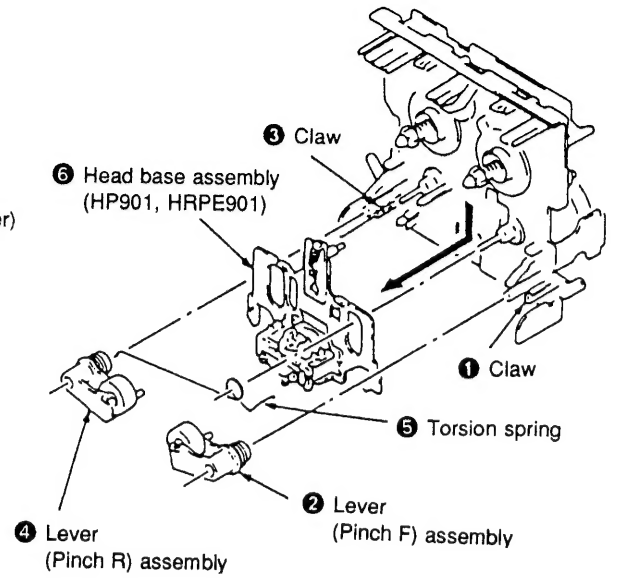

[CAPSTAN/REEL MOTOR]

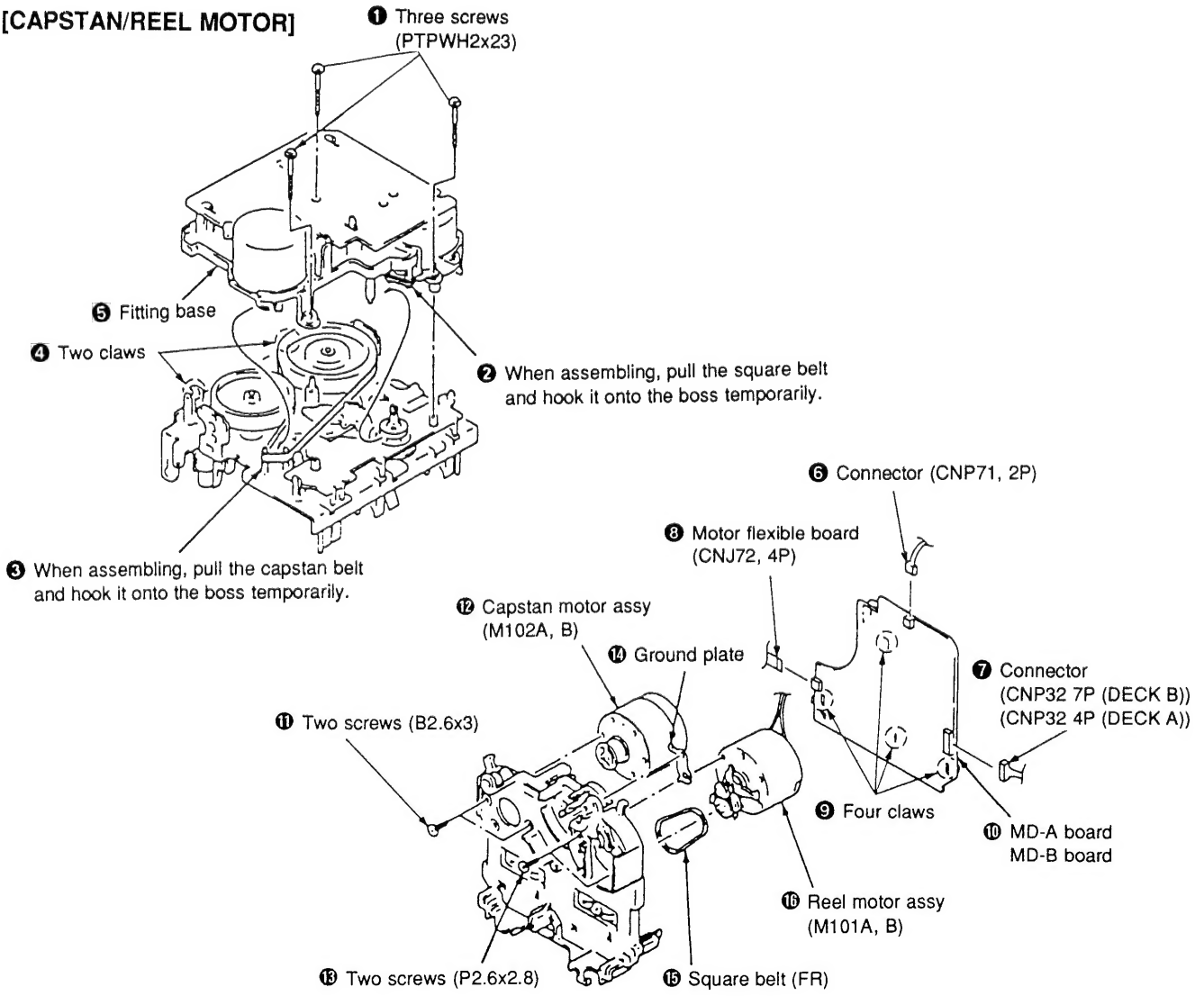

SECTION 3
MECHANICAL ADJUSTMENTS

PRECAUTION

1. Clean the following parts with a denatured-alcohol-moistened swab :
   record/playback head — pinch roller
   erase head — rubber belt
   capstan — idler
2. Demagnetize the record/playback head with a head demagnetizer.
3. Do not use a magnetized screwdriver for the adjustment.
4. After the adjustment, apply suitable locking compound to the parts adjusted.
5. The adjustments should be performed with the rated power supply voltage unless otherwise noted.

• Torque Measurement

Mode	Torque meter	Meter reading
FWD	CQ-102C	30 to 65 g•cm (0.42 to 0.90 oz•inch)
FWD Back tension		1 to 6 g•cm (0.014 to 0.08 oz•inch)
REV	CQ-102RC	30 to 65 g•cm (0.42 to 0.90 oz•inch)
REV Back tension		1 to 6 g•cm (0.014 to 0.08 oz•inch)
FF, REW	CQ-201B	70 to 120 g•cm (0.98 to 1.67 oz•inch)

SECTION 4
ELECTRICAL ADJUSTMENTS

1. The adjustment should be perormed in the publication. (Be sure to make playback adjustment at first.)
2. The adjustment and measurement should be performed for both L-CH and R-CH.
   • Switch position
   DOLBY NR switch : OFF

• Test Tape

Tape	Contents	Used for
P-4-A100	10kH , –10dB	Head Azimuth Adjustment
P-4-L300	315Hz, 0dB	Level Adjustment
WS-48B	3kHz, 0dB	Tape Speed Adjustment

0 dB = 0.775 V

Record/ Playback Head Azimuth Adjustment

DECK A **DECK B**

Procedure :

1. Forward Playback Mode

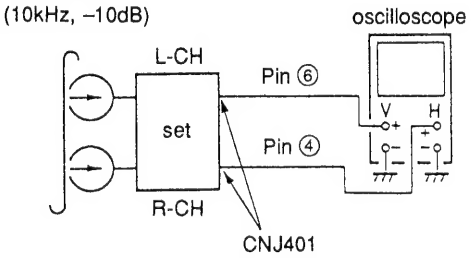

2. Turn the adjustment screw for the maximum output levels. If these levels do not match, turn the adjustment screw until both of output levels match together within 1 dB.

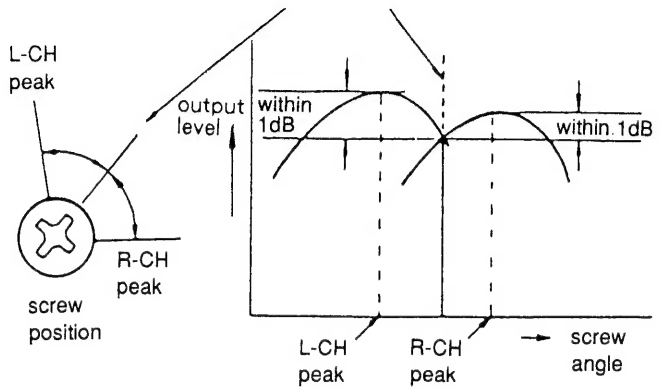

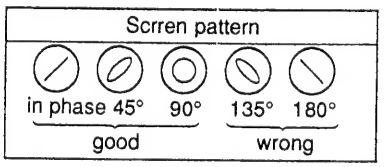

3. After the adjustments, apply suitable locking compound to the parts adjusted.

Adjustment Location :

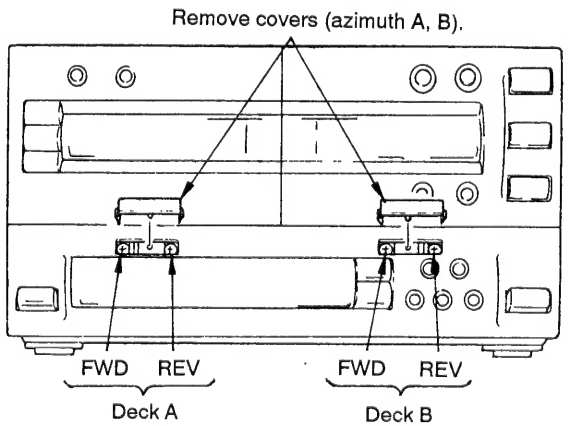

Tape Speed Adjustment DECK A DECK B

Procedure :

- Perform high speed adjustment before normal speed adjustmant.

Mode : playback

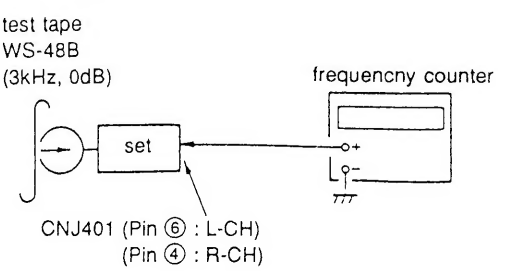

(High Speed Adjustment)

1. Short-circuit TP601 (Main board) with the power off.
2. Turn on the power, press the DUB switch, and set high speed playback.
3. Set decks A and B into the FWD mode.
4. Adjust deck A: RV72A (H) and deck B: RV72B (H) so that the reading of the frequency counter becomes the specified value.
5. After adjusting, short-circuit TP601.

(Normal Speed Adjustment)

1. Set the FWD playback mode.
2. Adjust deck A: RV71A (N), deck B: RV71B (N) so that the reading of the frequency counter becomes the adjustment value.

Adjustment Values:

High Speed	6000 ± 30Hz
Normal Speed	3000 ± 15Hz

Adjust so that the difference between tape top and tape end is within 3%. Adjust so that the deviation between the speeds of deck A and deck B at the tape top is within 1.5%.

Adjustment Location : MD-A and MD-B boards. (TCM-190MD)

Play back Level Adjustment DECK A DECK B

Procedure :

Mode : playback

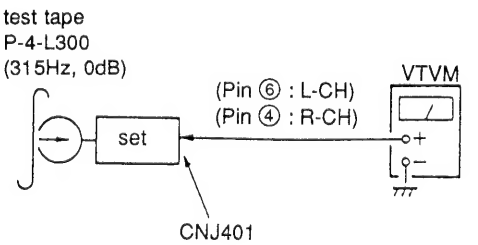

Deck A is RV11A (L-CH) and RV21A (R-CH), deck B is RV11B (L-CH) and RV21B (R-CH) so that adjustment within adjustment level as follows.

Adjustment Level :

CNJ401 PB level : −7.5dB ± 0.5dB (0.30 to 0.34V)
Level Difference between Channels : within 0.5dB

Confirm the level does not change in playback mode while changing the mode from playback to stop serveral times.

Adjustment Location : MD-A and MD-B borads

Record Bias Adjustment DECK B

Priocedure :
1. Mode : record

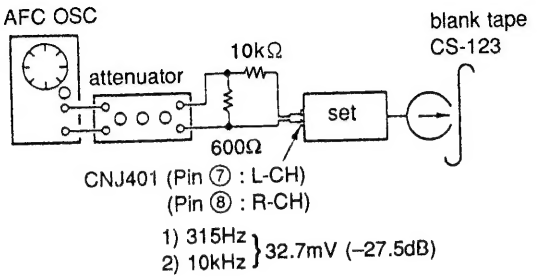

2. Mode : Playback

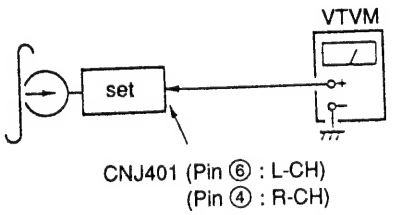

Confirm playback the signal recorded in step 1 become adjustment level as follows.
If these levels do not adjustment level, adjustment the RV81 (L-CH) and RV91 (R-CH) to repeat step 1 and 2.

Adjustment Level : Playback output of 10kHz to playback output of 315Hz : ± 0.5dB.

Adjustment Location : MD-B borad

Record Level Adjustment DECK B

Procedure :
1. Mode : record

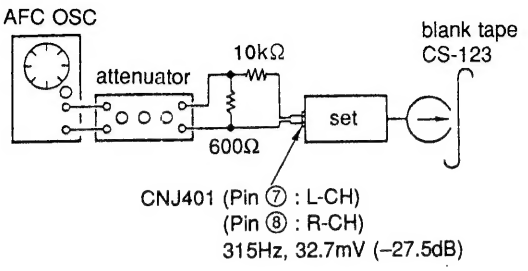

2. Mode : Playback

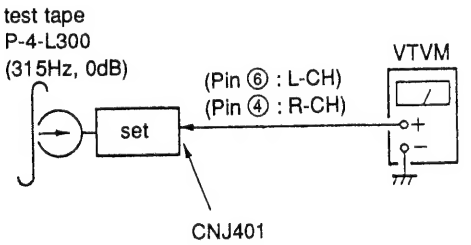

Confirm playback the signal recored in step 1 become adjustment level as follows.
If these levels do not adjustment level, adjustment the RV101 (L-CH) and RV201 (R-CH) to repeat step 1 and 2.

Adjustment Level :
CNJ401 PB level : –27.5dB ± 0.5dB (31 to 35mV).

Adjustment Location : MAIN borad

Adjustment Location :

[MAIN BOARD] — Component Side —

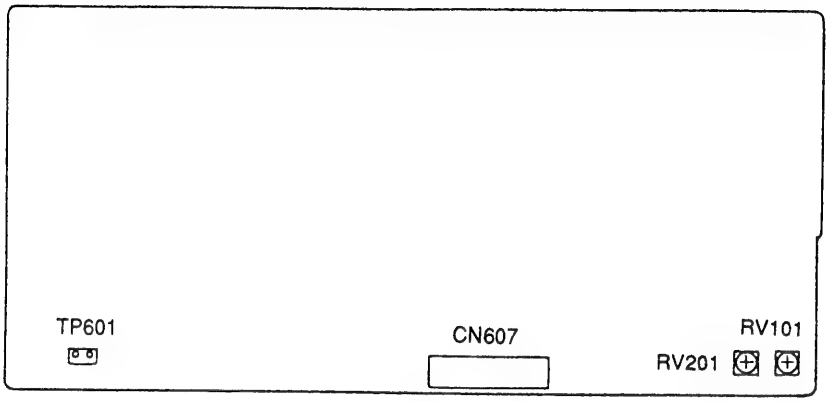

[MD-A, MD-B BOARD] — Component Side —

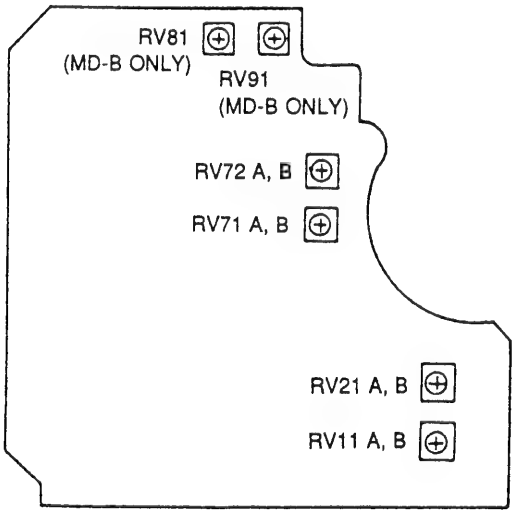

[CONNECTOR BOARD] — Component Side —

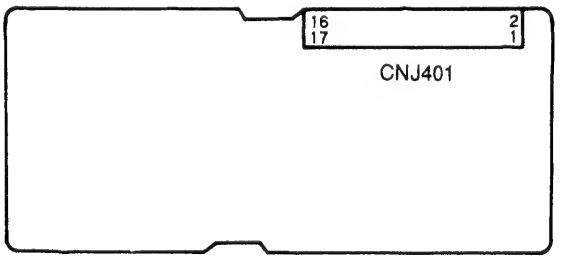

SECTION 5
DIAGRAMS

- **Semiconductor Lead Layouts**

BA3308F
CD4066BCM

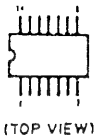

CXA1331M

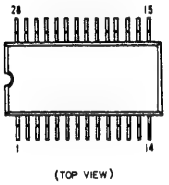

CXA1599Q

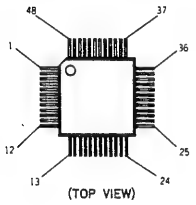

MC14052BF

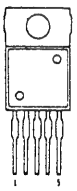

M38122-M2-060FP

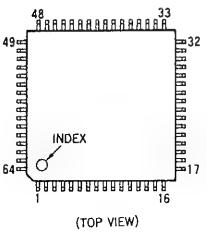

M5230L-A

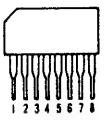

PST600E-T

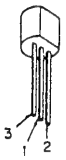

TA8242AK

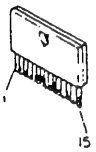

µPC1297CA

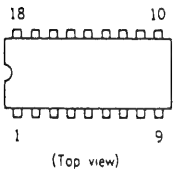

µPC4570G2

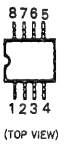

µPC78052-020

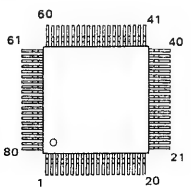

2SA1162-G
2SA1344
2SA1602-F
2SA4154-F L6
2SC3395
2SC3398
DTA144EK

2SB1094-LK
2SD2012

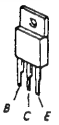

2SB1116-K

2SD1622-S
2SD999-CLCK

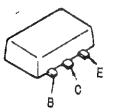

NJL5165K-B(H1)

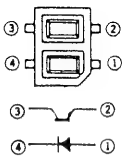

DTZ6.8B
MA110
MA8062
MA8082-M
MA8091
MA8180
02DZ2.0
1SS352

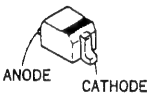

10E2

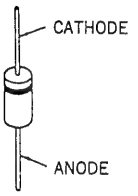

5-1. BLOCK DIAGRAM

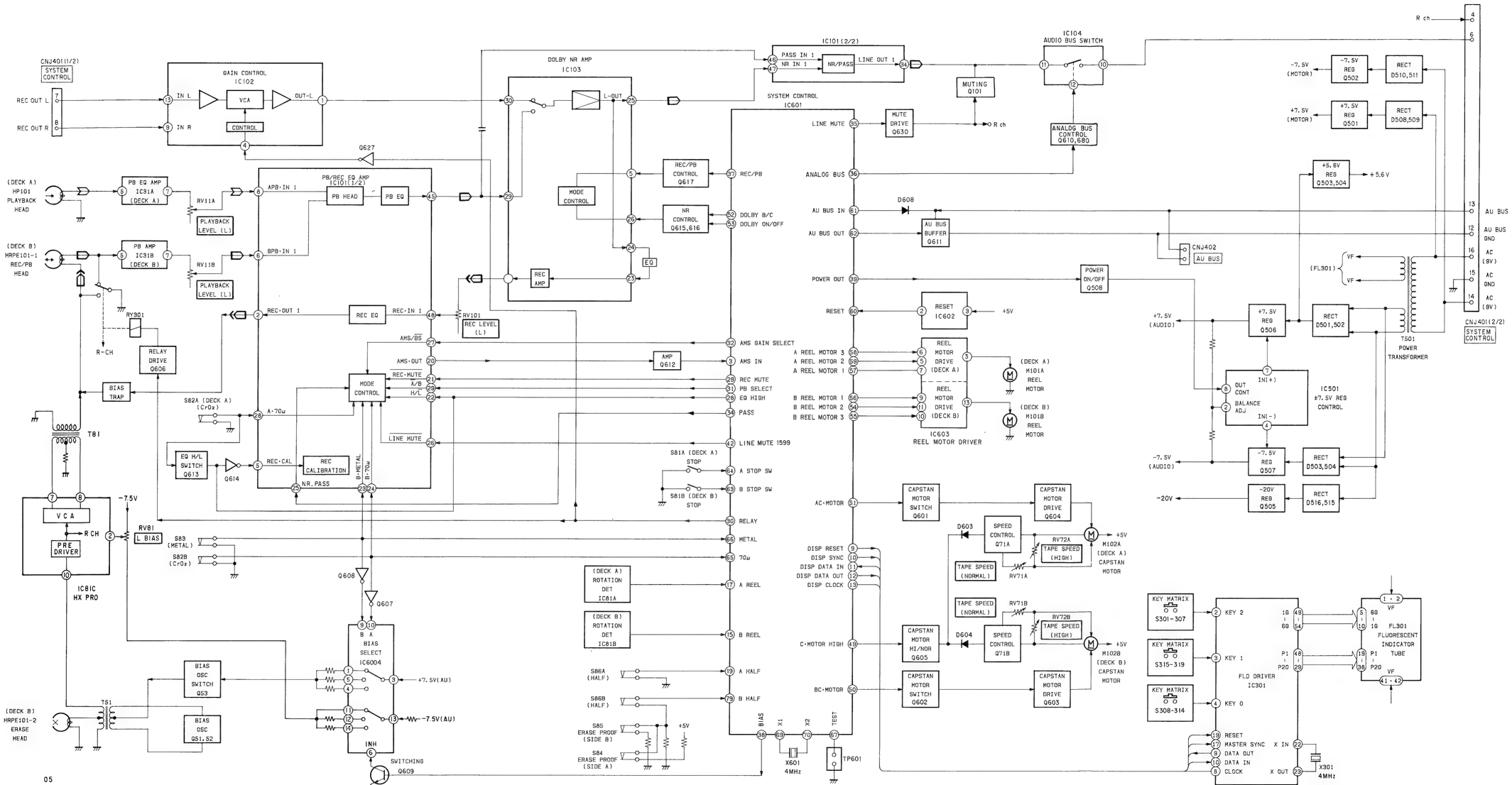

• Circuit Boards Location

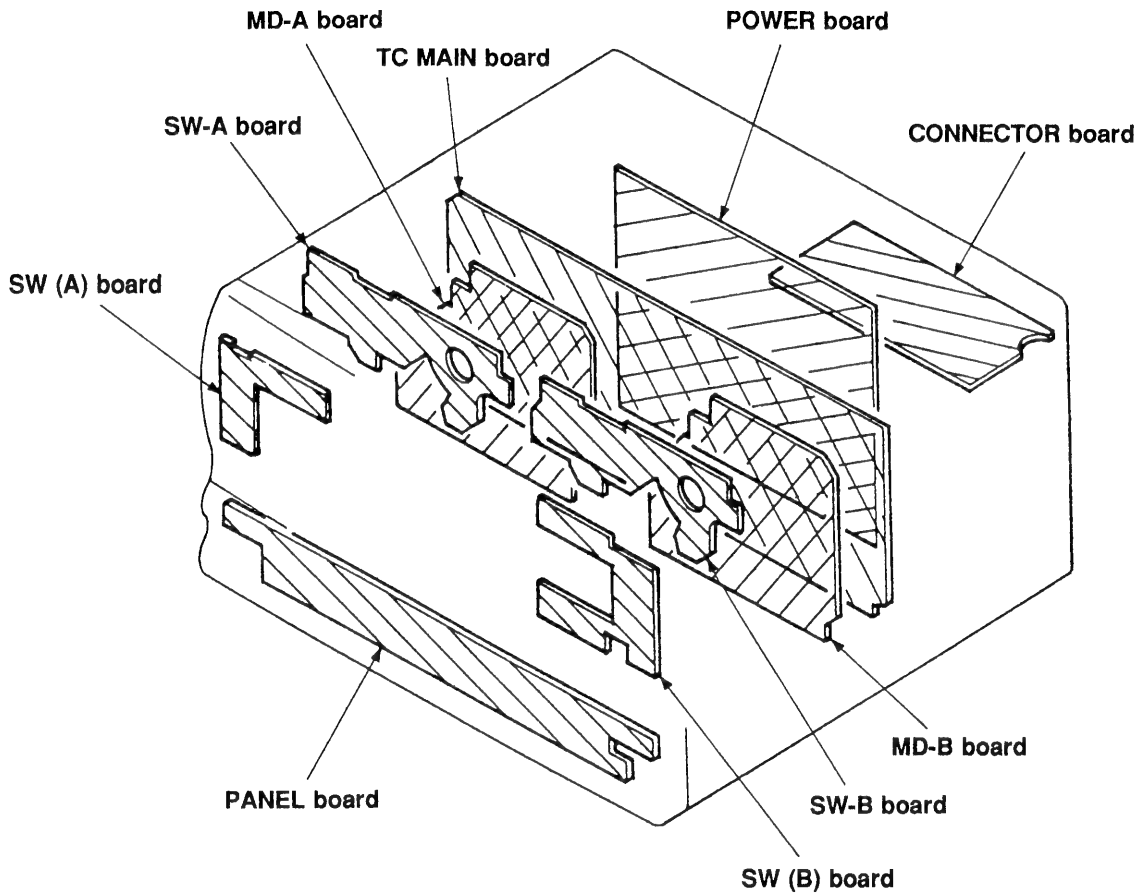

5-2. MAIN SECTION PRINTED WIRING BOARDS

• See page 10 for Semiconductor Lead Layouts, page 14 for Circuit Board Location.

• Semiconductor Location

Ref. No.	Location
D31	F-2
D602	E-17
D603	F-15
D604	F-16
D605	E-14
D606	F-14
D607	D-22
D608	C-16
D620	E-14
IC31A	F-9
IC31B	F-3
IC81A	B-11
IC81B	B-5
IC81C	D-4
IC101	E-21
IC102	D-23
IC103	F-23
IC104	D-19
IC601	D-15
IC602	D-16
IC603	E-14
IC6004	E-18
Q51	D-3
Q52	D-3
Q53	E-3
Q71A	F-11
Q71B	E-5
Q101	D-20
Q201	C-19
Q601	E-16
Q602	E-16
Q603	F-16
Q604	F-16
Q605	E-17
Q606	F-18
Q607	F-17
Q608	F-17
Q609	E-17
Q610	E-19
Q611	C-16
Q612	D-21
Q613	F-22
Q614	F-21
Q615	C-17
Q616	D-17
Q617	C-18
Q627	D-23
Q630	E-19
Q680	E-19

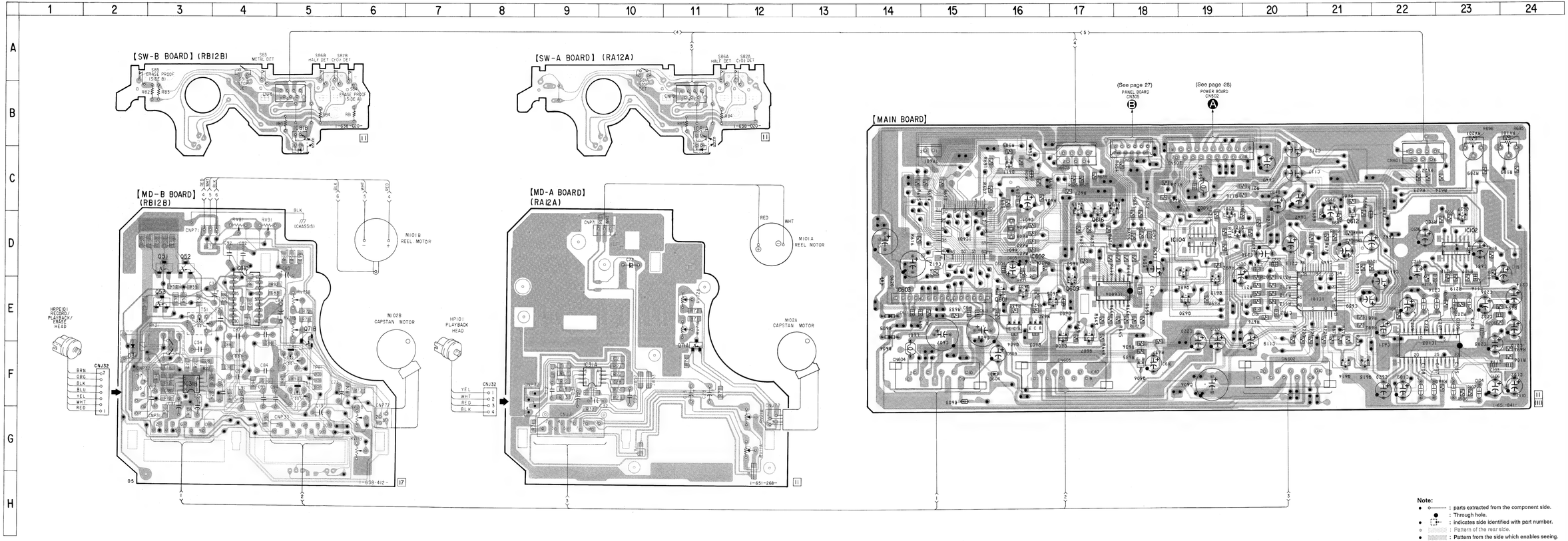

5-3. MAIN SECTION SCHEMATIC DIAGRAM • See page 30, 31 for IC Pin Functions (IC601).

• IC BLOCK DIAGRAMS

IC101 CXA1599Q

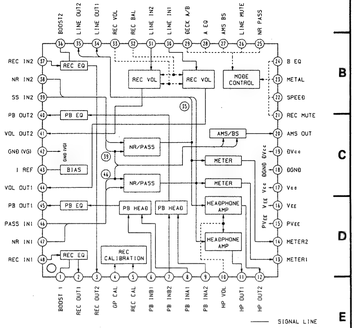

IC102 BA3308F

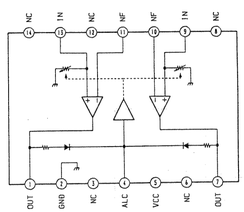

IC103 CXA1331M

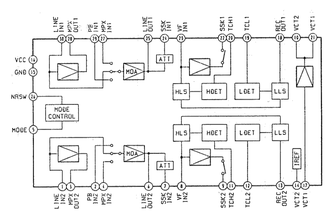

IC603 TA8242AK

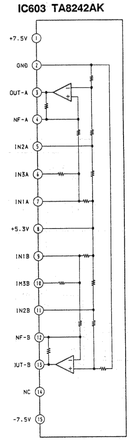

IC6004 MC14052BF

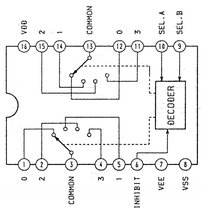

Note:

- All capacitors are in μF unless otherwise noted. pF: μμF 50 WV or less are not indicated except for electrolytics and tantalums.
- All resistors are in Ω and ¼ W or less unless otherwise specified.
- △ : internal component.
- ▬▬ : B + Line.
- ▬ ▬ ▬ : B − Line.
- ▭ : adjustment for repair.
- Voltages and waveforms are dc with respect to ground.
  no mark : STOP
  ( ) : PB (DECK B)
  (( )) : PB (DECK A)
  < > : REC
- Voltages are taken with a VOM (Input impedance 10 MΩ). Voltage variations may be noted due to normal production tolerances.
- Signal path.
  ▷ : PB (DECK A)
  ▷ : PB (DECK B)
  ▷ : REC (DECK B)

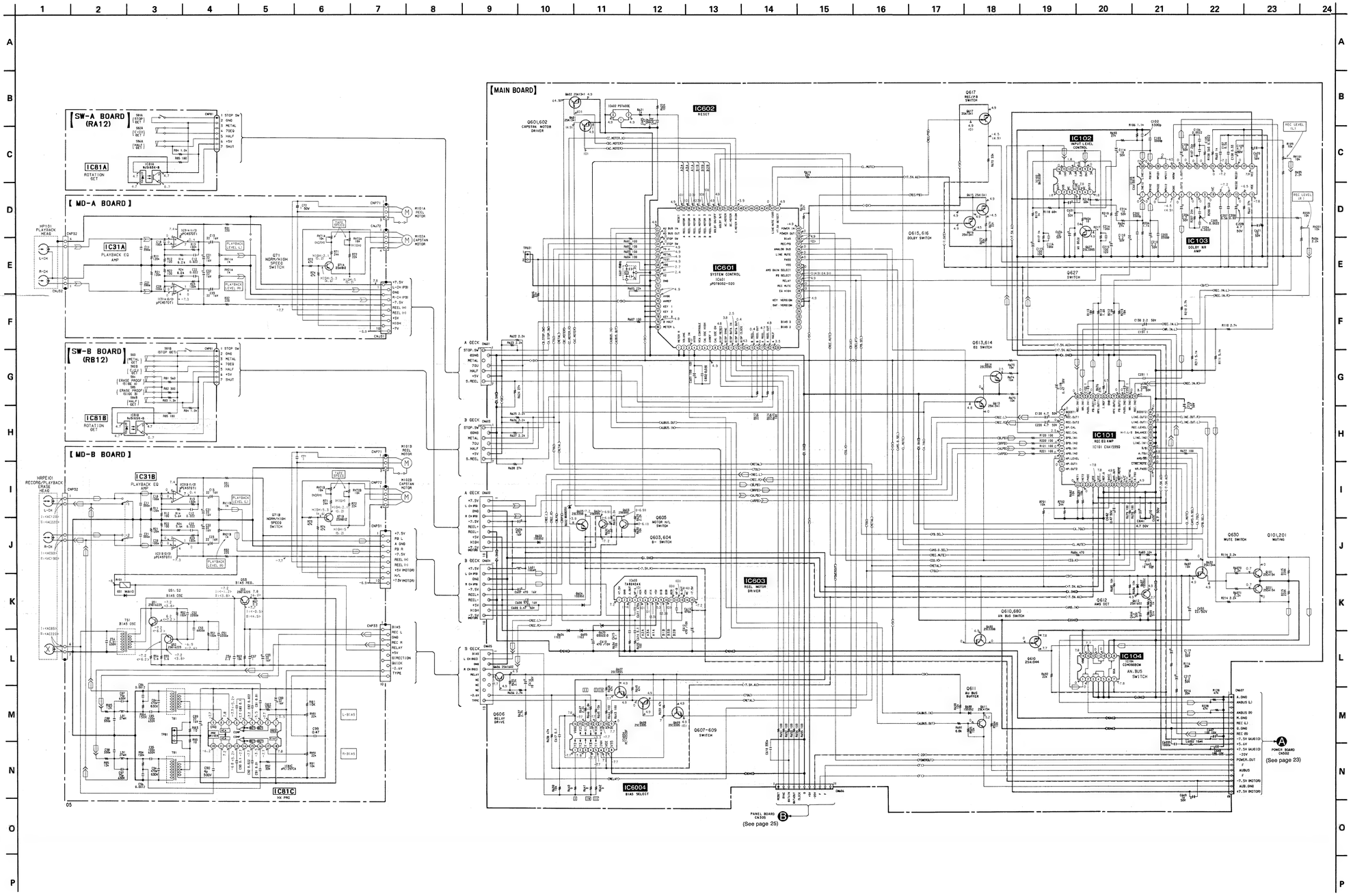

5-4. PANEL/POWER SECTION SCHEMATIC DIAGRAM • See page 29 for IC Pin Functions (IC301).

• IC Block Diagrams

IC501 M5230L

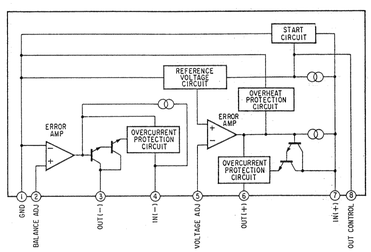

Note:
- All capacitors are in μF unless otherwise noted. pF: μμF. 50 WV or less are not indicated except for electrolytics and tantalums.
- All resistors are in Ω and ¼ W or less unless otherwise specified.
- △ : internal component.
- ▭ : panel designation.

Note: The components identified by mark ⚠ or dotted line with mark ⚠ are critical for safety. Replace only with part number specified.

- ——— : B + Line.
- — — — : B − Line.
- Voltages and waveforms are dc with respect to ground under no-signal conditions. no mark: STOP
- Voltages are taken with a VOM (10 MΩ/V). Voltage variations may be noted due to normal production tolerances.
- Signal path. ▷ : PB ▷ : REC

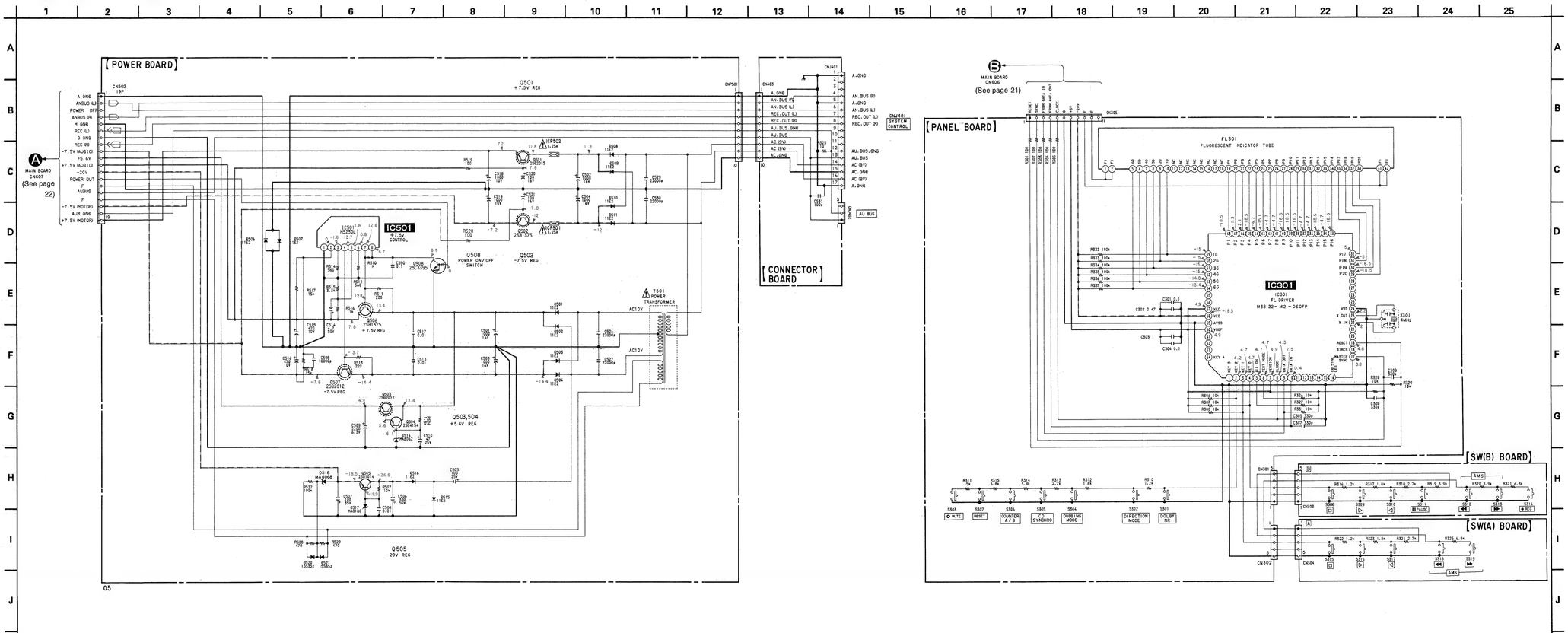

5-5. PANER/POWER SECTION PRINTED WIRING BOARDS

• See page 10 for Semiconductor Lead Layouts, page 14 for Circuit Board Location.

【PANEL BOARD】

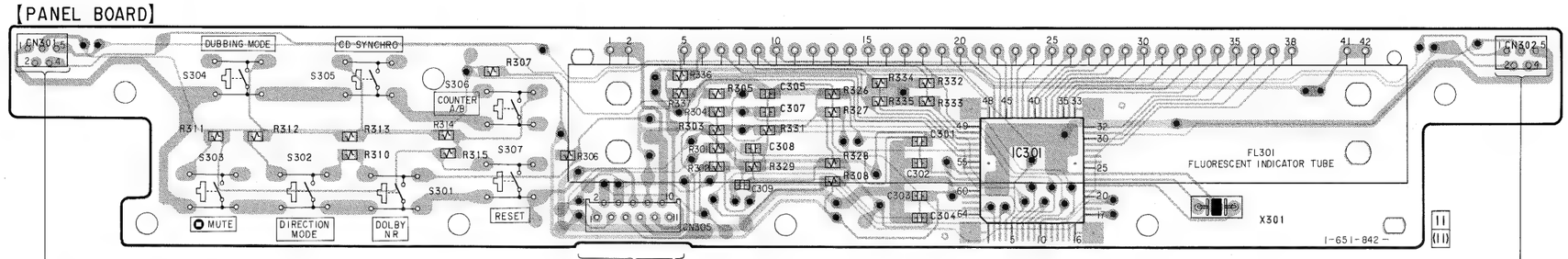

【SW(B) BOARD】

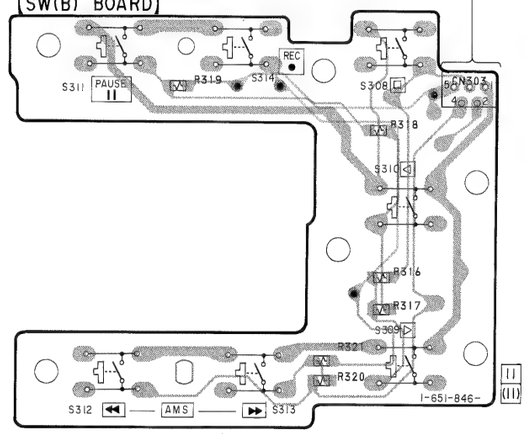

【SW(A) BOARD】

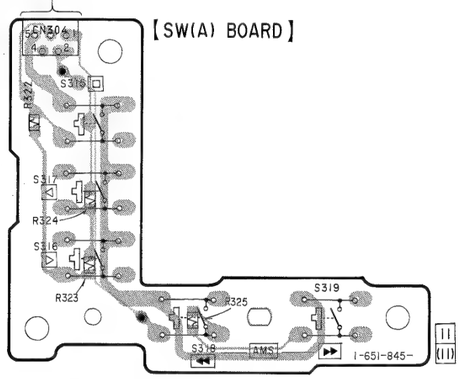

【POWER BOARD】

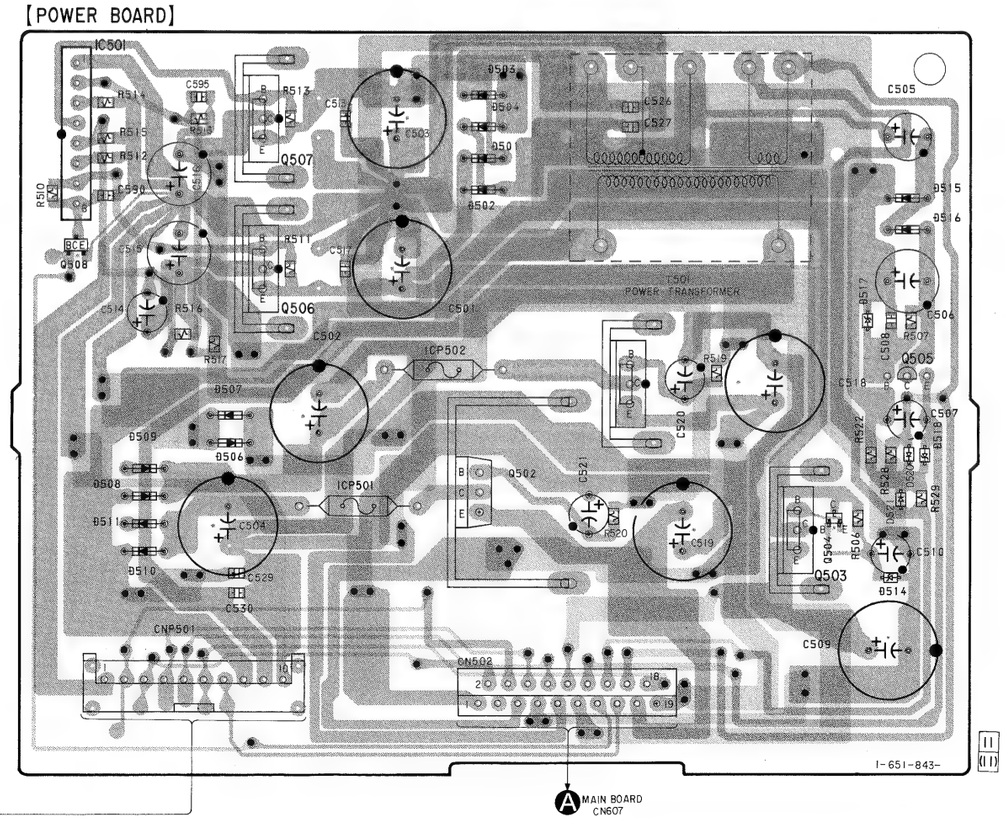

【CONNECTOR BOARD】

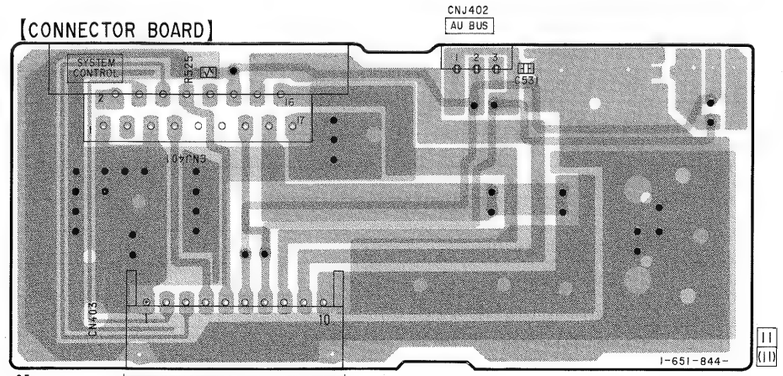

05

• **Semiconductor Location**

Ref. No.	Location
D501	F-9
D502	F-9
D503	E-9
D504	F-9
D506	H-7
D507	G-7
D508	H-7
D509	H-7
D510	I-7
D511	H-7
D514	I-12
D515	F-12
D516	F-12
D517	G-11
D518	H-12
D520	H-12
D521	H-12
IC301	B-8
IC501	E-7
Q501	G-10
Q502	H-9
Q503	I-11
Q504	H-11
Q505	G-11
Q506	G-8
Q507	F-8
Q508	G-6

Note:

- ● ● : Through hole.
- ○ : Pattern of the rear side.
- ● : Pattern from the side which enables seeing.

5-6. IC PIN FUNCTIONS

- **IC301 FL DRIVER (M38122-M2-060FP)**

Pin No.	Pin Name	I/O	Function
1	KYE3	I	Not used (Open).
2	KEY2	I	Key input (AD input)
3	KEY1	I	
4	KEY0	I	
5	ALL ON	I	Not used (Fixed at "H").
6	TEST MODE	I	
7	VERSION	I	VERSION discrimination input
8	CLOCK	I	Clock input from IC601
9	DATA OUT	O	Data output to IC601
10	DATA IN	I	Data input from IC601
11 to 16	——	O	Not used (Open).
17	MASTER SYNC	I	SYNC input from IC601.
18	SIRCS	I	Not used (Open).
19	RESET	I	Reset input from IC601
20, 21	——	O	Not used (Open).
22	X IN	–	Clock (4 MHz)
23	X OUT	–	Clock (4 MHz)
24	Vss	–	GND
25 to 28	——	O	Not used (Open).
29 to 48	P20 to P1	O	FL display drive
49 to 54	1G to 6G	O	FL display drive
55, 56	——	–	Not used (Open).
57	Vcc	–	+5V
58	VEE	–	–20V
59	AVss	–	GND
60	VREF	I	+5V
61 to 64	——		Not used (Open).

- **IC601 SYSTEM CONTROL (μPC78052-020)**

Pin No.	Pin Name	I/O	Function
1	METER R	I	VCA control input. Not used (Connected to GND)
2	VOLUME 0	I	
3	AMS IN	I	AMS signal input
4	AVss	–	GND
5	VCA CONTROL	O	VCA control output. Not used (Open)
6	CAL OSC HIGH	O	Electric adjustment mode output. Not used (Open)
7	AVREF1	–	+5V
8	CAL OSC ON	O	Not used (Open)
9	DISP RESET	O	RESET output to IC301
10	DISP SYNC	O	SYNC output to IC301
11	DISP DATA IN	I	DATA input from IC301
12	DISP DATA OUT	O	DATA output to IC301
13	DISP CLOCK	O	CLOCK output to IC301
14	——	–	Not used (Open)
15	B REEL	I	Deck B reel table detection
16	B REEL OUT	O	Deck B reel table output
17	A REEL	I	Deck A reel table detection
18	A REEL OUT	O	Deck A reel table output
19	A HALF	I	Deck A half switch detection
20 to 24	——	–	Not used (Open)
25	SAF VERSION	I	Not used (Connected to GND)
26	KEY VERSION	I	Not used (Connected to +5V)
27	——	–	Not used
28	EQ HIGH	O	Normal speed: "L", High speed: "H"
29	REC MUTE	O	"L": REC MUTE
30	RELAY	O	Relay ON/OFF. ON: "L", OFF: "H"
31	PB SELECT	O	Deck A/B select. Deck A: "L", Deck B: "H"
32	AMS GAIN SELECT	O	BS: "L", AMS: "H"
33	Vss	–	GND
34	PASS	O	"L": PASS MODE
35	LINE MUTE	O	"L": MUTE
36	ANALOG BUS	O	Analog bus output
37	REC/PB	O	REC: "L", PB: "H"
38	BIAS	O	"L": BIAS ON
39	POWER OUT	O	POWER ON: "L", STANDBY: "H"
40	POWER IN	I	POWER ON detection
41	+7.5V DETECT	I	+7.5V detection
42	LINE MUTE 1599	O	MUTE output to IC101
43 to 48	——	I	Not used (Open)
49	C. MOTOR HIGH	O	"H": Capstan motor high speed
50	BC. MOTOR	O	Capstan motor control for Deck B. "H": ON

Pin No.	Pin Name	I/O	Function
51	AC. MOTOR	O	Capstan motor control for Deck A. "H": ON
52	DOLBY B/C	O	C: "L", B: "H"
53	DOLBY ON/OFF	O	ON: "L", OFF: "H"
54	B REEL MOTOR 2	O	Deck B Reel motor control output
55	B REEL MOTOR 3	O	
56	B REEL MOTOR 1	O	
57	A REEL MOTOR 1	O	Deck A Reel motor control output
58	A REEL MOTOR 3	O	
59	A REEL MOTOR 2	O	
60	RESET	–	Reset input. "L": Reset
61	AU BUS IN	I	Audio bus input
62	AU BUS OUT	O	Audio bus output
63	B STOP SW	I	Deck B STOP switch detection
64	A STOP SW	I	Deck A STOP switch detection
65	70U	I	70 μsec switch detection
66	METAL	I	METAL switch detection
67	TEST	I	"L": Electric adjustment mode
68	V_{DD}	–	+5V
69	X1	O	Clock (4 MHz)
70	X2	I	
71	GND	–	GND
72	——	O	Not used (open)
73	VERSION	I	VERSION discrimination input
74	AV_{DD}	–	+5V
75	AV_{REF}	–	
76 to 78	KEY1 to KEY3	I	Not used (open)
79	B HALF	I	Deck B half switch detection
80	METER L	I	VCA control input. Not used (Connected to GND)

SECTION 6
EXPLODED VIEWS

NOTE:

- -XX and -X mean standardized parts, so they may have some difference from the original one.
- Color Indication of Appearance Parts
  Example:
  KNOB, BALANCE (WHITE) . . . (RED)
  ↑ ↑
  Parts Color Cabinet's Color
- Items marked "*" are not stocked since they are seldom required for routine service. Some delay should be anticipated when ordering these items.
- The mechanical parts with no reference number in the exploded views are not supplied.
- Hardware (# mark) list and accessories and packing materials are given in the last of the electrical parts list.

The components identified by mark ⚠ or dotted line with mark ⚠ are critical for safety.
Replace only with part number specified.

(1) CASE AND CHASSIS SECTION

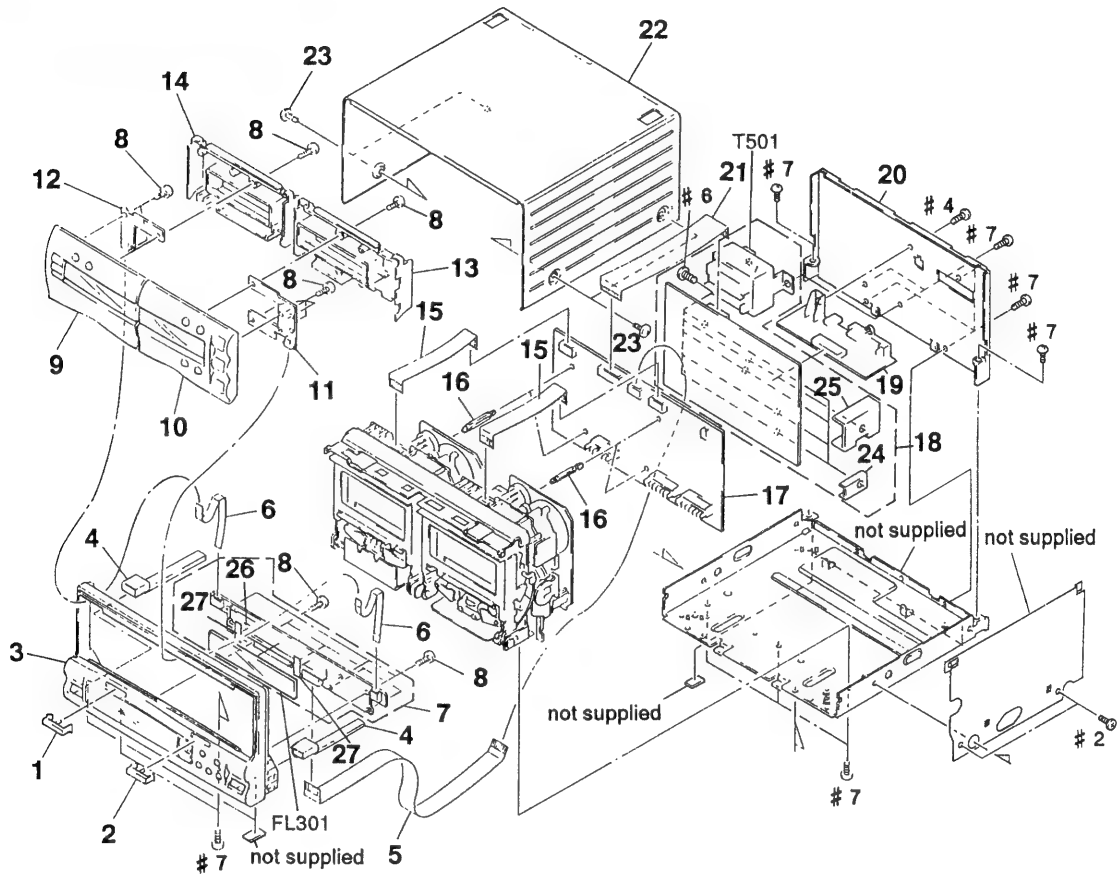

Ref. No.	Part No.	Description	Remark
1	3-905-904-01	COVER (AZIMUTH A)	
2	3-905-905-01	COVER (AZIMUTH B)	
3	X-3367-319-1	PANEL ASSY, FRONT	
4	3-905-906-01	SLIDER	
5	1-765-405-11	WIRE (FLAT TYPE) (19 CORE)	
6	1-751-819-11	WIRE (FLAT TYPE) (5 CORE)	
* 7	A-2007-214-A	PANEL BOARD, COMPLETE	
8	4-951-620-01	SCREW (2.6X8), +BVTP	
9	X-3367-320-1	LID (A) ASSY, CASSETTE	
10	X-3367-866-1	LID (B) ASSY, CASSETTE	
* 11	1-651-846-11	SW (B) BOARD	
* 12	1-651-845-11	SW (A) BOARD	
* 13	3-907-991-01	COVER (B), CASSETTE LID	
* 14	3-907-990-01	COVER (A), CASSETTE LID	
15	1-765-404-11	WIRE (FLAT TYPE) (7 CORE)	

Ref. No.	Part No.	Description	Remark
* 16	3-682-419-21	HOLDER, P.C.B	
* 17	A-2007-205-A	TC MAIN BOARD, COMPLETE	
* 18	A-2007-207-A	POWER BOARD, COMPLETE	
* 19	1-651-844-11	CONNECTOR BOARD	
* 20	3-905-901-51	PANEL, BACK	
21	1-751-821-11	WIRE (FLAT TYPE) (11 CORE)	
22	4-961-519-31	CASE	
23	3-363-099-21	SCREW (CASE 3 TP2)	
* 24	3-309-144-21	HEAT SNK	
* 25	4-880-403-11	HEAT SINK	
* 26	3-905-909-01	HOLDER (FL)	
* 27	4-932-810-11	CUSHION (FL)	
FL301	1-517-232-11	INDICATOR TUBE, FLUORESCENT	
⚠T501	1-423-812-11	TRANSFORMER, POWER	

(2) CASSETTE HOLDER SECTION

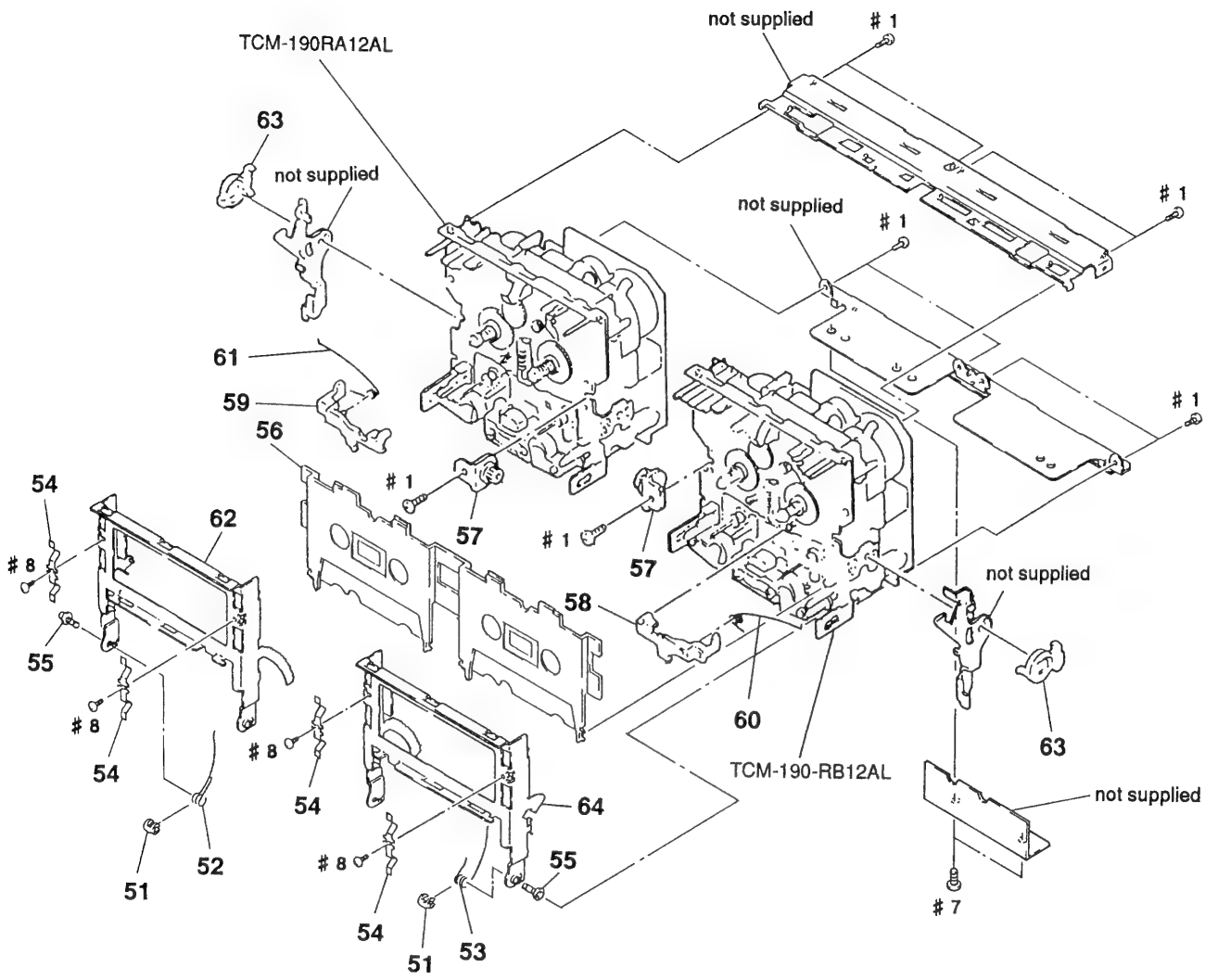

Ref. No.	Part No.	Description	Remark
51	3-367-720-01	RING (W), RETAINING	
52	3-354-959-01	SPRING (LOADING L), TORSION	
53	3-354-960-01	SPRING (LOADING R), TORSION	
54	3-340-137-01	SPRING, CASSETTE RETAINER	
55	3-367-721-01	SHAFT (FULCRUM SHAFT)	
56	3-367-711-01	RETAINER, CASSETTE	
57	3-354-963-01	DAMPER	

Ref. No.	Part No.	Description	Remark
58	3-354-956-01	LEVER (EJ SAFTY LEVER R)	
59	3-354-955-01	LEVER (EJ SAFTY LEVER L)	
60	3-354-962-01	SPRING (EJ SAFTY SPRING R)	
61	3-354-961-01	SPRING (EJ SAFTY SPRING L)	
62	3-367-712-11	HOLDER (L), CASSETTE	
63	3-354-957-01	JOINT (LOCK LEVER)	
64	3-367-713-11	HOLDER (R), CASSETTE	

(3) MECHANISM DECK SECTION-1
(DECK A: TCM-190RA12AL/DECK B: TCM-190RB12AL)

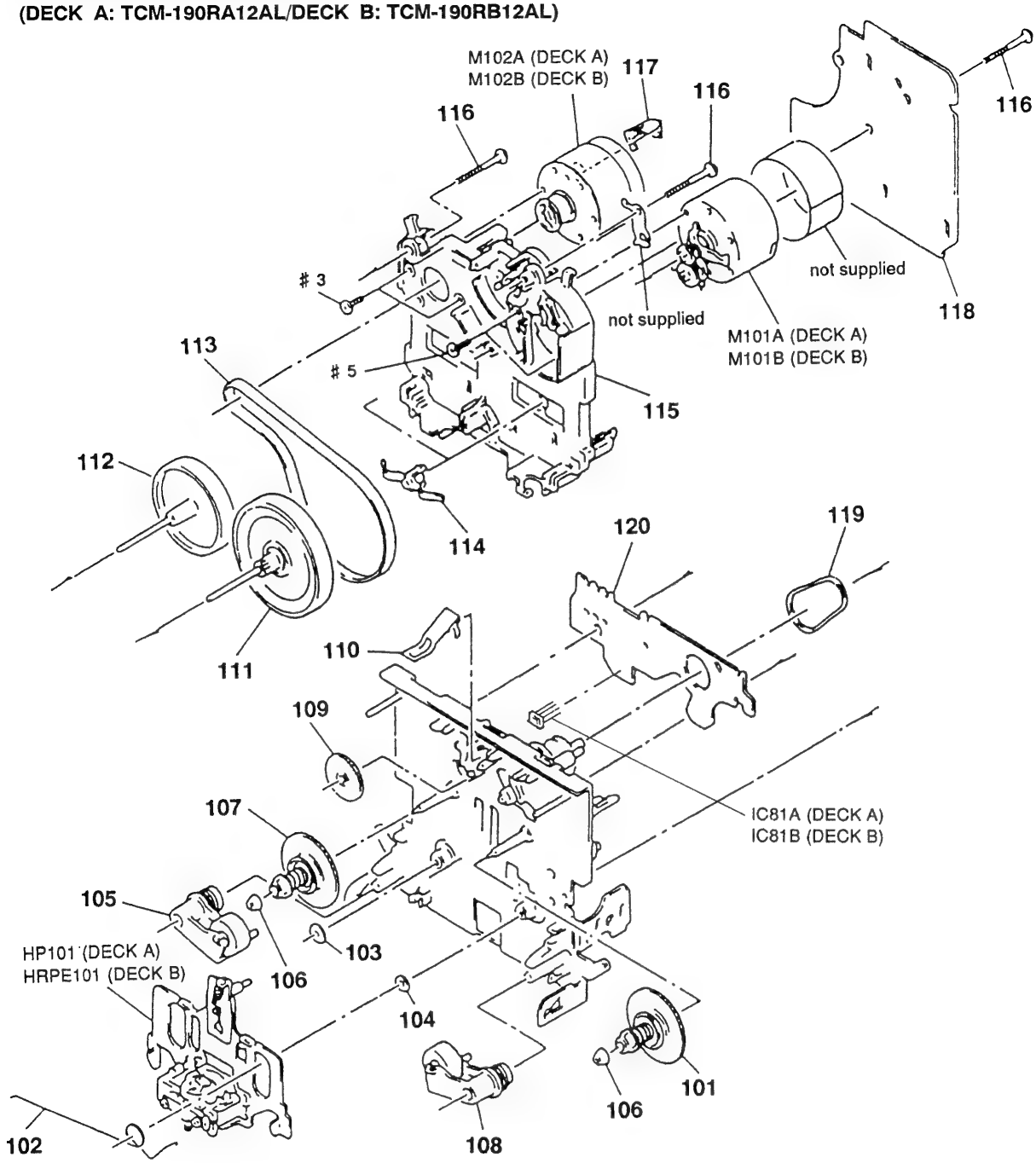

Ref. No.	Part No.	Description	Remark
101	X-3366-970-1	TABLE ASSY, REEL	
102	3-907-362-01	SPRING, TORSION	
103	3-356-714-01	WASHER	
104	3-356-713-01	WASHER	
105	X-3366-048-1	LEVER (PINCH R) ASSY	
106	3-913-841-01	CAP (REEL)	
107	X-3366-971-1	TABLE ASSY (B), REEL	
108	X-3366-047-1	LEVER (PINCH F) ASSY	
109	3-359-424-01	GEAR (REV GEAR)	
110	3-359-430-01	SPRING(CASSETTE RETAINER), LEAF	
111	X-3367-629-1	FLYWHEEL (FWD) ASSY	
112	X-3367-630-2	FLYWHEEL (REV) ASSY	
113	3-359-417-01	BELT (FLAT), CAPSTAN	
114	3-575-321-00	RETAINER, THRUST, CAPSTAN	
115	3-359-436-11	BASE (THRUST RETAINER), FITTING	

Ref. No.	Part No.	Description	Remark
116	3-359-414-01	SCREW (+PTPWH 2X23)	
117	1-638-983-11	MOTOR FLEXIBLE BOARD	
* 118	A-2007-265-A	MD-B BOARD, COMPLETE (RB12AL)	
* 118	A-2007-266-A	MD-A BOARD, COMPLETE (RA12AL)	
119	3-359-466-01	BELT (FR), SQUARE	
* 120	1-638-020-11	SW-A BOARD (DECK A)	
* 120	1-638-020-11	SW-B BOARD (DECK B)	
HP101	A-2003-757-A	BASE ASSY, HEAD (DECK A)	
HRPE101	A-2003-930-A	BASE ASSY, HEAD (DECK B)	
IC81A	8-749-924-10	PHOTO REFLECTOR NJ5165K-B (DECK A)	
IC81B	8-749-924-10	PHOTO REFLECTOR NJ5165K-B (DECK B)	
M101A	X-3363-501-2	MOTOR ASSY (REEL) (DECK A)	
M101B	X-3363-501-2	MOTOR ASSY (REEL) (DECK B)	
M102A	X-3365-377-1	MOTOR ASSY (CAPSTAN) (DECK A)	
M102B	X-3365-377-1	MOTOR ASSY (CAPSTAN) (DECK B)	

(4) MECHANISM DECK SECTION-2
(DECK A: TCM-190RA12AL/DECK B: TCM-190RB12AL)

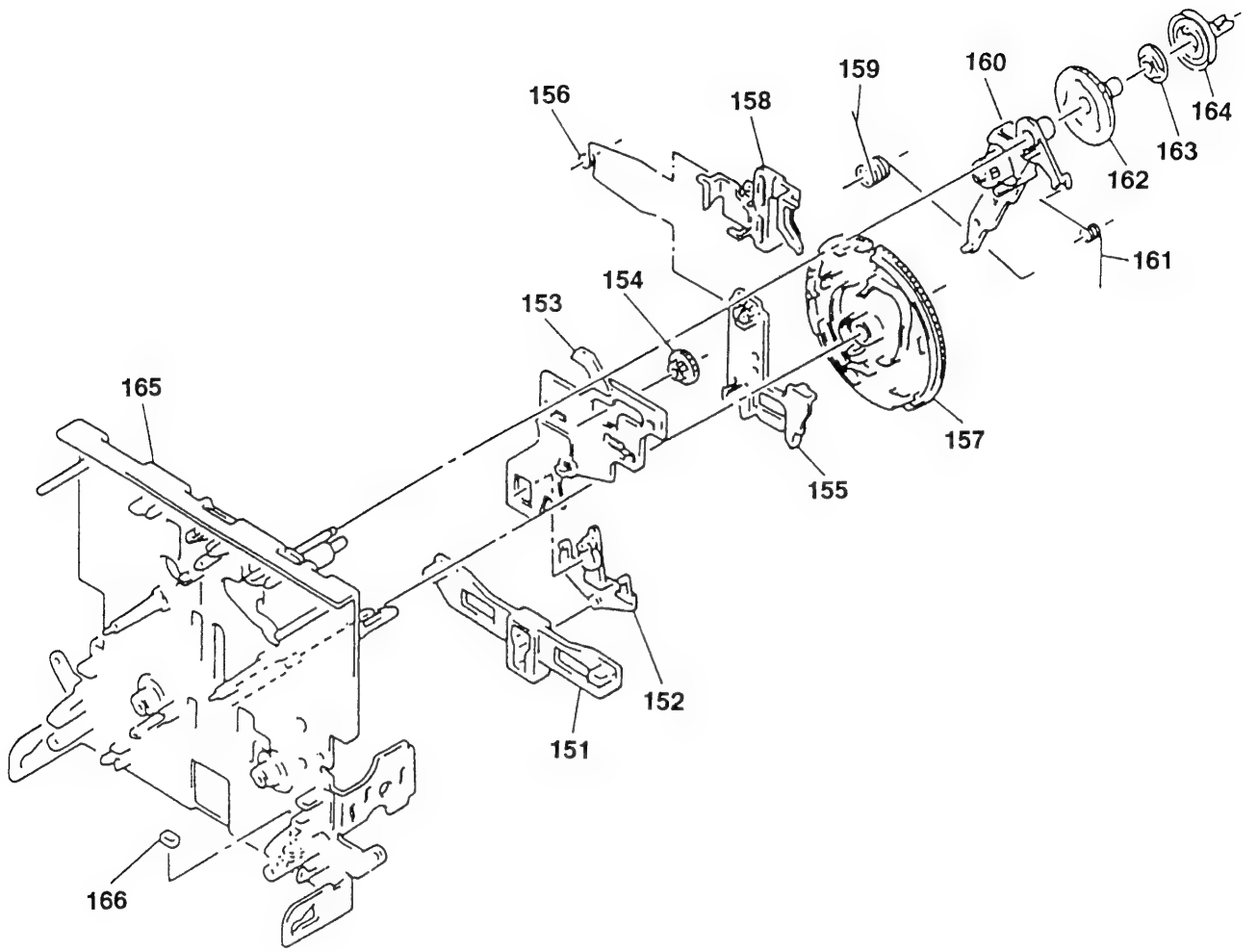

Ref. No.	Part No.	Description	Remark
* 151	3-359-425-01	SLIDER (REVERSE SLIDER)	
152	3-359-426-01	LEVER (REVERSE LEVER)	
* 153	3-359-415-01	SLIDER (TRIGGER SLIDER)	
154	3-359-448-01	GEAR (TRIGGER)	
* 155	3-359-427-01	SLIDER (LEVERSE SLIDER)	
156	3-359-454-01	SPRING, TORSION	
157	3-359-420-01	GEAR (CAM GEAR)	
158	3-359-429-01	SLIDER (BRAKE PLATE)	
159	3-359-456-01	SPRING(TRIGGER SPRING),TORSION	
160	X-3366-569-1	ARM ASSY, FR	
161	3-359-453-01	SPRING (FR ARM), TORSION	
162	3-359-419-11	GEAR (FR GEAR)	
163	3-359-421-01	CLUTCH (REEL DISK)	
164	3-359-418-11	PULLEY (FR PULLEY)	
165	X-3359-415-1	CHASSIS ASSY, MECHANICAL	
166	3-359-469-01	SPACER	

CONNECTOR **MD-A**

SECTION 7
ELECTRICAL PARTS LIST

NOTE:
- Due to standardization, replacements in the parts list may be different from the parts specified in the diagrams or the components used on the set.
- -XX and -X mean standardized parts, so they may have some difference from the original one.
- RESISTORS
  All resistors are in ohms.
  METAL:Metal-film resistor.
  METAL OXIDE: Metal oxide-film resistor.
  F:nonflammable
- Items marked "*" are not stocked since they are seldom required for routine service. Some delay should be anticipated when ordering these items.
- SEMICONDUCTORS
  In each case, u:μ, for example:
  uA..: μA.. uPA..: μPA..
  uPB..: μPB.. uPC..: μPC.. uPD..: μPD..
- CAPACITORS
  uF: μF
- COILS
  uH: μH

The components identified by mark ⚠ or dotted line with mark. ⚠ are critical for safety. Replace only with part number specified.

When indicating parts by reference number, please include the board.

Ref. No.	Part No.	Description			Remark
*	1-651-844-11	CONNECTOR BOARD			
		**********			
		< CAPACITOR >			
C531	1-163-117-00	CERAMIC CHIP	100PF	5% 50V	
		< CONNECTOR >			
* CN403	1-569-505-11	PIN, CONNECTOR 10P			
CNJ401	1-569-624-21	SOCKET, CONNECTOR 17P			
* CNJ402	1-565-561-11	PIN, CONNECTOR 3P			
		< RESISTOR >			
R525	1-216-001-00	METAL CHIP	10	5% 1/10W	
**********					
*	A-2007-266-A	MD-A BOARD, COMPLETE (RA12AL)			
		**********			
		< CAPACITOR >			
C11	1-163-131-00	CERAMIC CHIP	390PF	5% 50V	
C12	1-136-157-00	FILM	0.022uF	5% 50V	
C13	1-124-234-00	ELECT	22uF	20% 16V	
C18	1-163-117-00	CERAMIC CHIP	100PF	5% 50V	
C21	1-163-131-00	CERAMIC CHIP	390PF	5% 50V	
C22	1-136-157-00	FILM	0.022uF	5% 50V	
C23	1-124-234-00	ELECT	22uF	20% 16V	
C28	1-163-117-00	CERAMIC CHIP	100PF	5% 50V	
C31	1-124-234-00	ELECT	22uF	20% 16V	
C32	1-124-234-00	ELECT	22uF	20% 16V	
C72	1-124-499-11	ELECT, NONPOLAR	1uF	20% 50V	
		< CONNECTOR >			
* CNJ31	1-580-782-11	CONNECTOR, BOARD TO BOARD			
* CNJ72	1-580-411-11	SOCKET, CONNECTOR 4P			
* CNP32	1-580-772-11	PIN, CONNECTOR (PC BOARD) 4P			
* CNP71	1-564-719-11	PIN, CONNECTOR (SMALL TYPE) 3P			
		< IC >			
IC31A	8-759-106-02	IC uPC4570G2			
		< JUMPER RESISTOR >			
JW1	1-216-295-00	METAL GLAZE	0	5% 1/10W	
JW51	1-216-296-00	METAL GLAZE	0	5% 1/8W	
JW52	1-216-296-00	METAL GLAZE	0	5% 1/8W	
JW52	1-216-296-00	METAL GLAZE	0	5% 1/8W	
JW53	1-216-296-00	METAL GLAZE	0	5% 1/8W	
JW54	1-216-296-00	METAL GLAZE	0	5% 1/8W	
		< TRANSISTOR >			
Q71A	8-729-216-22	TRANSISTOR 2SA1162-G			
		< RESISTOR >			
R11	1-216-099-00	METAL CHIP	120K	5% 1/10W	
R12	1-216-025-00	METAL CHIP	100	5% 1/10W	
R13	1-216-100-00	METAL GLAZE	130K	5% 1/10W	
R14	1-216-068-00	METAL CHIP	6.2K	5% 1/10W	
R21	1-216-099-00	METAL CHIP	120K	5% 1/10W	
R22	1-216-025-00	METAL CHIP	100	5% 1/10W	
R23	1-216-100-00	METAL GLAZE	130K	5% 1/10W	
R24	1-216-068-00	METAL CHIP	6.2K	5% 1/10W	
R31	1-216-033-00	METAL CHIP	220	5% 1/10W	
R32	1-216-033-00	METAL CHIP	220	5% 1/10W	
R71	1-216-082-00	METAL GLAZE	24K	5% 1/10W	
R72	1-216-081-00	METAL CHIP	22K	5% 1/10W	
R73	1-216-089-91	METAL GLAZE	47K	5% 1/10W	
R74	1-216-089-91	METAL GLAZE	47K	5% 1/10W	
		< VARIABLE RESISTOR >			
RV11A	1-241-761-11	RES, ADJ, CARBON 1K			
RV21A	1-241-761-11	RES, ADJ, CARBON 1K			
RV71A	1-241-630-11	RES, ADJ, CARBON 10K			
RV72A	1-241-630-11	RES, ADJ, CARBON 10K			
**********					

Ref.No.	Part No.	Description			Remark
*	A-2007-265-A	MD-B BOARD, COMPLETE (RB12AL)			
		**********			
		< CAPACITOR >			
C11	1-163-131-00	CERAMIC CHIP	390PF	5%	50V
C12	1-136-157-00	FILM	0.022uF	5%	50V
C13	1-124-234-00	ELECT	22uF	20%	16V
C18	1-163-117-00	CERAMIC CHIP	100PF	5%	50V
C21	1-163-131-00	CERAMIC CHIP	390PF	5%	50V
C22	1-136-157-00	FILM	0.022uF	5%	50V
C23	1-124-234-00	ELECT	22uF	20%	16V
C28	1-163-117-00	CERAMIC CHIP	100PF	5%	50V
C31	1-124-234-00	ELECT	22uF	20%	16V
C32	1-124-234-00	ELECT	22uF	20%	16V
C33	1-124-234-00	ELECT	22uF	20%	16V
C51	1-164-161-11	CERAMIC CHIP	0.0022uF	10%	100V
C52	1-164-161-11	CERAMIC CHIP	0.0022uF	10%	100V
C53	1-163-019-00	CERAMIC CHIP	0.0068uF	10%	50V
C54	1-136-601-11	FILM	0.01uF	5%	630V
C56	1-164-505-11	CERAMIC CHIP	2.2uF		16V
C57	1-164-346-11	CERAMIC CHIP	1uF		16V
C71	1-164-346-11	CERAMIC CHIP	1uF		16V
C80	1-124-234-00	ELECT	22uF	20%	16V
C81	1-164-232-11	CERAMIC CHIP	0.01uF		50V
C82	1-136-157-00	FILM	0.022uF	5%	50V
C83	1-164-004-11	CERAMIC CHIP	0.1uF	10%	25V
C84	1-136-478-11	FILM	470PF	5%	630V
C85	1-136-433-11	FILM	100PF	5%	630V
C86	1-163-143-00	CERAMIC CHIP	0.0012uF	5%	50V
C87	1-136-273-91	FILM	75PF	5%	630V
C88	1-163-003-11	CERAMIC CHIP	330PF	10%	50V
C89	1-124-234-00	ELECT	22uF	20%	16V
C90	1-107-584-11	CERAMIC	4PF	0.25PF	500V
C91	1-164-232-11	CERAMIC CHIP	0.01uF		50V
C92	1-136-157-00	FILM	0.022uF	5%	50V
C93	1-164-004-11	CERAMIC CHIP	0.1uF	10%	25V
C94	1-136-478-11	FILM	470PF	5%	630V
C95	1-136-433-11	FILM	100PF	5%	630V
C96	1-163-143-00	CERAMIC CHIP	0.0012uF	5%	50V
C97	1-136-273-91	FILM	75PF	5%	630V
C98	1-163-003-11	CERAMIC CHIP	330PF	10%	50V
C99	1-164-005-11	CERAMIC CHIP	0.47uF		25V
		< CONNECTOR >			
* CNP31	1-580-782-11	CONNECTOR, BOARD TO BOARD			
* CNP32	1-580-781-11	PIN, CONNECTOR (PC BOARD) 7P			
* CNP33	1-580-782-11	CONNECTOR, BOARD TO BOARD			
* CNP71	1-564-719-11	PIN, CONNECTOR (SMALL TYPE) 3P			
* CNP72	1-580-411-11	SOCKET, CONNECTOR 4P			

Ref.No.	Part No.	Description			Remark
		< DIODE >			
D31	8-719-404-46	DIODE MA110			
		< IC >			
IC31B	8-759-106-02	IC uPC4570G2			
IC81B	8-759-106-56	IC uPC1297CA			
		< COIL >			
L81	1-410-780-11	INDUCTOR	27mH		
L91	1-410-780-11	INDUCTOR	27mH		
		< TRANSISTOR >			
Q51	8-729-808-01	TRANSISTOR 2SD1622-S			
Q52	8-729-808-01	TRANSISTOR 2SD1622-S			
Q53	8-729-808-01	TRANSISTOR 2SD1622-S			
Q71B	8-729-216-22	TRANSISTOR 2SA1162-G			
		< RESISTOR >			
R11	1-216-099-00	METAL CHIP	120K	5%	1/10W
R12	1-216-025-00	METAL CHIP	100	5%	1/10W
R13	1-216-100-00	METAL GLAZE	130K	5%	1/10W
R14	1-216-067-00	METAL CHIP	5.6K	5%	1/10W
R21	1-216-099-00	METAL CHIP	120K	5%	1/10W
R22	1-216-025-00	METAL CHIP	100	5%	1/10W
R23	1-216-100-00	METAL GLAZE	130K	5%	1/10W
R24	1-216-067-00	METAL CHIP	5.6K	5%	1/10W
R31	1-216-033-00	METAL CHIP	220	5%	1/10W
R32	1-216-033-00	METAL CHIP	220	5%	1/10W
R33	1-216-065-00	METAL CHIP	4.7K	5%	1/10W
R51	1-216-097-00	METAL CHIP	100K	5%	1/10W
R52	1-216-097-00	METAL CHIP	100K	5%	1/10W
R53	1-216-073-00	METAL CHIP	10K	5%	1/10W
R54	1-216-309-00	METAL CHIP	5.6	5%	1/10W
R55	1-216-309-00	METAL CHIP	5.6	5%	1/10W
R57	1-216-298-00	METAL CHIP	2.2	5%	1/10W
R71	1-216-082-00	METAL GLAZE	24K	5%	1/10W
R72	1-216-081-00	METAL CHIP	22K	5%	1/10W
R73	1-216-089-91	METAL GLAZE	47K	5%	1/10W
R74	1-216-089-91	METAL GLAZE	47K	5%	1/10W
R81	1-216-073-00	METAL CHIP	10K	5%	1/10W
R82	1-216-085-00	METAL CHIP	33K	5%	1/10W
R83	1-216-001-00	METAL CHIP	10	5%	1/10W
R84	1-216-101-00	METAL CHIP	150K	5%	1/10W
R85	1-216-075-00	METAL CHIP	12K	5%	1/10W
R91	1-216-073-00	METAL CHIP	10K	5%	1/10W
R92	1-216-085-00	METAL CHIP	33K	5%	1/10W
R93	1-216-001-00	METAL CHIP	10	5%	1/10W
R94	1-216-101-00	METAL CHIP	150K	5%	1/10W

MD-B PANEL POWER

Ref.No.	Part No.	Description			Remark
R95	1-216-075-00	METAL CHIP	12K	5%	1/10W
		< VARIABLE RESISTOR >			
RV11B	1-241-761-11	RES, ADJ, CARBON 1K			
RV21B	1-241-761-11	RES, ADJ, CARBON 1K			
RV71B	1-241-630-11	RES, ADJ, CARBON 10K			
RV72B	1-241-630-11	RES, ADJ, CARBON 10K			
RV81	1-241-786-11	RES, ADJ, CARBON 22K			
RV91	1-241-786-11	RES, ADJ, CARBON 22K			
		< RELAY >			
RY31	1-515-913-11	RELAY			
		< TRANSFORMER >			
T51	1-406-417-11	COIL, BIAS OSCILLATION			
T81	1-433-381-11	TRANSFORMER, BIAS OSCILLATOR			
T91	1-433-381-11	TRANSFORMER, BIAS OSCILLATOR			
		< TEST PIN >			
* TP81	1-568-449-11	HOUSING, CONNECTOR(PC BOARD)3P			
**********					
*	A-2007-214-A	PANEL BOARD, COMPLETE			
		**********			
*	3-905-909-01	HOLDER (FL)			
*	4-932-810-11	CUSHION (FL)			
		< CAPACITOR >			
C301	1-165-319-11	CERAMIC CHIP	0.1uF		50V
C302	1-164-005-11	CERAMIC CHIP	0.47uF		25V
C303	1-164-346-11	CERAMIC CHIP	1uF		16V
C304	1-165-319-11	CERAMIC CHIP	0.1uF		50V
C305	1-163-003-11	CERAMIC CHIP	330PF	10%	50V
C307	1-163-003-11	CERAMIC CHIP	330PF	10%	50V
C308	1-163-003-11	CERAMIC CHIP	330PF	10%	50V
C309	1-163-003-11	CERAMIC CHIP	330PF	10%	50V
		< CONNECTOR >			
CN301	1-580-472-11	SOCKET, CONNECTOR 5P			
CN302	1-580-472-11	SOCKET, CONNECTOR 5P			
* CN305	1-580-415-11	SOCKET, CONNECTOR 11P			
		< FILTER >			
FL301	1-517-232-11	INDICATOR TUBE, FLUORESCENT			
		< IC >			
IC301	8-759-198-92	IC M38122-M2-060FP			
		< RESISTOR >			
R301	1-216-025-00	METAL CHIP	100	5%	1/10W
R302	1-216-025-00	METAL CHIP	100	5%	1/10W
R303	1-216-025-00	METAL CHIP	100	5%	1/10W
R304	1-216-025-00	METAL CHIP	100	5%	1/10W
R305	1-216-025-00	METAL CHIP	100	5%	1/10W
R306	1-216-073-00	METAL CHIP	10K	5%	1/10W
R307	1-216-073-00	METAL CHIP	10K	5%	1/10W
R308	1-216-073-00	METAL CHIP	10K	5%	1/10W
R310	1-216-051-00	METAL CHIP	1.2K	5%	1/10W
R311	1-216-077-00	METAL CHIP	15K	5%	1/10W
R312	1-216-055-00	METAL CHIP	1.8K	5%	1/10W
R313	1-216-059-00	METAL CHIP	2.7K	5%	1/10W
R314	1-216-063-00	METAL CHIP	3.9K	5%	1/10W
R315	1-216-069-00	METAL CHIP	6.8K	5%	1/10W
R326	1-216-073-00	METAL CHIP	10K	5%	1/10W
R327	1-216-073-00	METAL CHIP	10K	5%	1/10W
R328	1-216-073-00	METAL CHIP	10K	5%	1/10W
R329	1-216-073-00	METAL CHIP	10K	5%	1/10W
R331	1-216-073-00	METAL CHIP	10K	5%	1/10W
R332	1-216-097-00	METAL CHIP	100K	5%	1/10W
R333	1-216-097-00	METAL CHIP	100K	5%	1/10W
R334	1-216-097-00	METAL CHIP	100K	5%	1/10W
R335	1-216-097-00	METAL CHIP	100K	5%	1/10W
R336	1-216-097-00	METAL CHIP	100K	5%	1/10W
R337	1-216-097-00	METAL CHIP	100K	5%	1/10W
		< SWITCH >			
S301	1-554-303-21	SWITCH, TACTILE (DOLBY NR)			
S302	1-554-303-21	SWITCH, TACTILE (DIRECTION MODE)			
S303	1-554-303-21	SWITCH, TACTILE (⏻ MUTE)			
S304	1-554-303-21	SWITCH, TACTILE (DUBBING MODE)			
S305	1-554-303-21	SWITCH, TACTILE (CD SYNCHRO)			
S306	1-554-303-21	SWITCH, TACTILE (COUNTER NB)			
S307	1-554-303-21	SWITCH, TACTILE (RESET)			
		< VIBRATOR >			
X301	1-577-358-21	VIBRATOR, CERAMIC (4MHz)			
**********					
*	A-2007-207-A	POWER BOARD, COMPLETE			
		**********			
*	3-309-144-21	HEAT SINK			
*	4-880-403-11	HEAT SINK			
		< CAPACITOR >			
C501	1-124-360-00	ELECT	1000uF	20%	16V
C502	1-124-360-00	ELECT	1000uF	20%	16V

Ref. No.	Part No.	Description			Remark
C503	1-124-360-00	ELECT	1000uF	20%	16V
C504	1-124-360-00	ELECT	1000uF	20%	16V
C505	1-124-478-11	ELECT	100uF	20%	25V
C506	1-124-920-11	ELECT	330uF	20%	50V
C507	1-124-122-11	ELECT	100uF	20%	50V
C508	1-164-232-11	CERAMIC CHIP	0.01uF		50V
C509	1-126-927-11	ELECT	2200uF	20%	6.3V
C510	1-124-477-11	ELECT	47uF	20%	25V
C513	1-164-232-11	CERAMIC CHIP	0.01uF		50V
C514	1-124-927-11	ELECT	4.7uF	20%	100V
C515	1-124-472-11	ELECT	470uF	20%	10V
C516	1-124-472-11	ELECT	470uF	20%	10V
C517	1-164-232-11	CERAMIC CHIP	0.01uF		50V
C518	1-126-926-11	ELECT	1000uF	20%	10V
C519	1-126-926-11	ELECT	1000uF	20%	10V
C520	1-126-101-11	ELECT	100uF	20%	16V
C521	1-126-101-11	ELECT	100uF	20%	16V
C526	1-163-037-11	CERAMIC CHIP	0.022uF	10%	25V
C527	1-163-037-11	CERAMIC CHIP	0.022uF	10%	25V
C529	1-163-037-11	CERAMIC CHIP	0.022uF	10%	25V
C530	1-163-037-11	CERAMIC CHIP	0.022uF	10%	25V
C590	1-163-038-00	CERAMIC CHIP	0.1uF		25V
C595	1-164-232-11	CERAMIC CHIP	0.01uF		50V
		< CONNECTOR >			
* CN502	1-568-862-11	SOCKET, CONNECTOR 19P			
* CNP501	1-569-496-11	SOCKET, CONNECTOR 10P			
		< DIODE >			
D501	8-719-200-02	DIODE	10E2		
D502	8-719-200-02	DIODE	10E2		
D503	8-719-200-02	DIODE	10E2		
D504	8-719-200-02	DIODE	10E2		
D506	8-719-200-02	DIODE	10E2		
D507	8-719-200-02	DIODE	10E2		
D508	8-719-200-02	DIODE	10E2		
D509	8-719-200-02	DIODE	10E2		
D510	8-719-200-02	DIODE	10E2		
D511	8-719-200-02	DIODE	10E2		
D514	8-719-422-58	DIODE	MA8062		
D515	8-719-200-02	DIODE	10E2		
D516	8-719-200-02	DIODE	10E2		
D517	8-719-017-94	DIODE	MA8180-TX		
D518	8-719-977-12	DIODE	DTZ6.8B		
D520	8-719-016-74	DIODE	1SS352		
D521	8-719-016-74	DIODE	1SS352		

Ref. No.	Part No.	Description			Remark
		< IC >			
IC501	8-759-602-66	IC	M5230L-A		
		< IC LINK >			
⚠ICP501	1-532-840-21	LINK, IC			
⚠ICP502	1-532-840-21	LINK, IC			
		< TRANSISTOR >			
Q501	8-729-209-15	TRANSISTOR	2SD2012		
Q502	8-729-141-83	TRANSISTOR	2SB1094-LK		
Q503	8-729-209-15	TRANSISTOR	2SD2012		
Q504	8-729-602-21	TRANSISTOR	2SC4154		
Q505	8-729-118-01	TRANSISTOR	2SB1116		
Q506	8-729-141-83	TRANSISTOR	2SB1094-LK		
Q507	8-729-209-15	TRANSISTOR	2SD2012		
Q508	8-729-805-45	TRANSISTOR	2SC3395		
		< RESISTOR >			
R506	1-216-055-00	METAL CHIP	1.8K	5%	1/10W
R507	1-216-073-00	METAL CHIP	10K	5%	1/10W
R510	1-216-121-00	METAL CHIP	1M	5%	1/10W
R511	1-216-033-00	METAL CHIP	220	5%	1/10W
R512	1-216-043-00	METAL CHIP	560	5%	1/10W
R513	1-216-033-00	METAL CHIP	220	5%	1/10W
R514	1-216-043-00	METAL CHIP	560	5%	1/10W
R515	1-216-061-00	METAL CHIP	3.3K	5%	1/10W
R516	1-216-074-00	METAL CHIP	11K	5%	1/10W
R517	1-216-077-00	METAL CHIP	15K	5%	1/10W
R518	1-216-077-00	METAL CHIP	15K	5%	1/10W
R519	1-216-025-00	METAL CHIP	100	5%	1/10W
R520	1-216-025-00	METAL CHIP	100	5%	1/10W
R522	1-216-097-00	METAL CHIP	100K	5%	1/10W
R528	1-216-041-00	METAL CHIP	470	5%	1/10W
R529	1-216-041-00	METAL CHIP	470	5%	1/10W
		< TRANSFORMER >			
⚠T501	1-423-812-11	TRANSFORMER, POWER			
**********					
*	1-651-845-11	SW (A) BOARD			
		**********			
		< CONNECTOR >			
CN304	1-580-412-11	SOCKET, CONNECTOR 5P			

The components identified by mark ⚠ or dotted line with mark ⚠ are critical for safety. Replace only with part number specified.

SW (A) **SW (B)** **SW-A** **SW-B** **TC MAIN**

Ref.No.	Part No.	Description			Remark
		< RESISTOR >			
R322	1-216-051-00	METAL CHIP	1.2K	5% 1/10W	
R323	1-216-055-00	METAL CHIP	1.8K	5% 1/10W	
R324	1-216-059-00	METAL CHIP	2.7K	5% 1/10W	
R325	1-216-069-00	METAL CHIP	6.8K	5% 1/10W	
		< SWITCH >			
S315	1-554-303-21	SWITCH, TACTILE (□)			
S316	1-554-303-21	SWITCH, TACTILE (▷)			
S317	1-554-303-21	SWITCH, TACTILE (◁)			
S318	1-554-303-21	SWITCH, TACTILE (◀◀)			
S319	1-554-303-21	SWITCH, TACTILE (▶▶)			
**********					
*	1-651-846-11	SW (B) BOARD			
		**********			
		< CONNECTOR >			
CN303	1-580-412-11	SOCKET, CONNECTOR 5P			
		< RESISTOR >			
R316	1-216-051-00	METAL CHIP	1.2K	5% 1/10W	
R317	1-216-055-00	METAL CHIP	1.8K	5% 1/10W	
R318	1-216-059-00	METAL CHIP	2.7K	5% 1/10W	
R319	1-216-063-00	METAL CHIP	3.9K	5% 1/10W	
R320	1-216-063-00	METAL CHIP	3.9K	5% 1/10W	
R321	1-216-069-00	METAL CHIP	6.8K	5% 1/10W	
		< SWITCH >			
S308	1-554-303-21	SWITCH, TACTILE (□)			
S309	1-554-303-21	SWITCH, TACTILE (▷)			
S310	1-554-303-21	SWITCH, TACTILE (◁)			
S311	1-554-303-21	SWITCH, TACTILE (❚❚ PAUSE)			
S312	1-554-303-21	SWITCH, TACTILE (◀◀)			
S313	1-554-303-21	SWITCH, TACTILE (▶▶)			
S314	1-554-303-21	SWITCH, TACTILE (● REC)			
**********					
*	1-638-020-11	SW-A BOARD (DECK A)			
		**********			
		< CONNECTOR >			
* CNP81	1-568-850-11	SOCKET, CONNECTOR 7P			
		< IC >			
IC81A	8-749-924-10	IC PHONT REFLECTOR NJL5165K-B(H1)			
		< RESISTOR >			
R84	1-249-417-11	CARBON	1K	5% 1/4W F	
R85	1-249-408-11	CARBON	180	5% 1/4W F	
		< SWITCH >			
S81A	1-571-958-11	SWITCH, PUSH (1 KEY) (STOP DET)			
S82A	1-571-281-21	SWITCH, LEAF (CrO2 DET)			
S86A	1-571-281-21	SWITCH, LEAF (HALF DET)			
**********					
*	1-638-020-11	SW-B BOARD (DECK B)			
		**********			
		< CONNECTOR >			
* CNP81	1-568-850-11	SOCKET, CONNECTOR 7P			
		< IC >			
IC81B	8-749-924-10	IC PHONT REFLECTOR NJL5165K-B(H1)			
		< RESISTOR >			
R81	1-249-414-11	CARBON	560	5% 1/4W F	
R82	1-247-818-11	CARBON	300	5% 1/4W	
R83	1-247-834-11	CARBON	1.3K	5% 1/4W	
R84	1-249-417-11	CARBON	1K	5% 1/4W F	
R85	1-249-408-11	CARBON	180	5% 1/4W F	
		< SWITCH >			
S81B	1-571-958-11	SWITCH, PUSH (1 KEY) (STOP DET)			
S82B	1-571-281-21	SWITCH, LEAF (CrO2 DET)			
S83	1-571-281-21	SWITCH, LEAF (METAL DET)			
S84	1-571-281-21	SWITCH, LEAF (ERASE PROOF (SIDE A))			
S85	1-571-281-21	SWITCH, LEAF (ERASE PROOF (SIDE B))			
S86B	1-571-281-21	SWITCH, LEAF (HALF DET)			
**********					
*	A-2007-205-A	TC MAIN BOARD, COMPLETE			
		**********			
	7-682-547-09	SCREW +BVTT 3X6 (S)			
		< CAPACITOR >			
C102	1-164-182-11	CERAMIC CHIP	0.0033uF	10% 50V	
C103	1-164-182-11	CERAMIC CHIP	0.0033uF	10% 50V	
C104	1-106-351-00	MYLAR	2200PF	5% 200V	
C105	1-106-351-00	MYLAR	2200PF	5% 200V	
C106	1-124-257-00	ELECT	2.2uF	20% 50V	
C107	1-136-174-00	FILM	0.56uF	5% 50V	
C108	1-136-171-00	FILM	0.33uF	5% 50V	
C109	1-124-927-11	ELECT	4.7uF	20% 100V	

Ref. No.	Part No.	Description			Remark
C110	1-124-925-11	ELECT	2. 2uF	20%	100V
C114	1-124-261-00	ELECT	10uF	20%	50V
C115	1-124-584-00	ELECT	100uF	20%	10V
C116	1-163-117-00	CERAMIC CHIP	100PF	5%	50V
C117	1-124-925-11	ELECT	2. 2uF	20%	100V
C119	1-124-902-00	ELECT	0. 47uF	20%	50V
C120	1-124-927-11	ELECT	4. 7uF	20%	100V
C130	1-124-925-11	ELECT	2. 2uF	20%	100V
C131	1-164-346-11	CERAMIC CHIP	1uF		16V
C132	1-164-346-11	CERAMIC CHIP	1uF		16V
C202	1-164-182-11	CERAMIC CHIP	0. 0033uF	10%	50V
C203	1-164-182-11	CERAMIC CHIP	0. 0033uF	10%	50V
C204	1-106-351-00	MYLAR	2200PF	5%	200V
C205	1-106-351-00	MYLAR	2200PF	5%	200V
C206	1-124-257-00	ELECT	2. 2uF	20%	50V
C207	1-136-174-00	FILM	0. 56uF	5%	50V
C208	1-136-171-00	FILM	0. 33uF	5%	50V
C209	1-124-927-11	ELECT	4. 7uF	20%	100V
C210	1-124-925-11	ELECT	2. 2uF	20%	100V
C214	1-124-261-00	ELECT	10uF	20%	50V
C215	1-124-584-00	ELECT	100uF	20%	10V
C216	1-163-117-00	CERAMIC CHIP	100PF	5%	50V
C217	1-124-925-11	ELECT	2. 2uF	20%	100V
C219	1-124-902-00	ELECT	0. 47uF	20%	50V
C220	1-124-927-11	ELECT	4. 7uF	20%	100V
C230	1-124-925-11	ELECT	2. 2uF	20%	100V
C231	1-164-346-11	CERAMIC CHIP	1uF		16V
C232	1-164-346-11	CERAMIC CHIP	1uF		16V
C601	1-124-443-00	ELECT	100uF	20%	10V
C602	1-163-037-11	CERAMIC CHIP	0. 022uF	10%	25V
C604	1-163-038-00	CERAMIC CHIP	0. 1uF		25V
C605	1-124-902-00	ELECT	0. 47uF	20%	50V
C606	1-126-103-11	ELECT	470uF	20%	16V
C607	1-126-103-11	ELECT	470uF	20%	16V
C608	1-126-103-11	ELECT	470uF	20%	16V
C609	1-124-902-00	ELECT	0. 47uF	20%	50V
C610	1-124-472-11	ELECT	470uF	20%	10V
C611	1-163-133-00	CERAMIC CHIP	470PF	5%	50V
C612	1-124-472-11	ELECT	470uF	20%	10V
C613	1-163-133-00	CERAMIC CHIP	470PF	5%	50V
C614	1-163-038-00	CERAMIC CHIP	0. 1uF		25V
C615	1-163-038-00	CERAMIC CHIP	0. 1uF		25V
C616	1-124-907-11	ELECT	10uF	20%	50V
C617	1-163-038-00	CERAMIC CHIP	0. 1uF		25V
C618	1-163-003-11	CERAMIC CHIP	330PF	10%	50V
C620	1-124-907-11	ELECT	10uF	20%	50V
C621	1-124-907-11	ELECT	10uF	20%	50V
C630	1-124-927-11	ELECT	4. 7uF	20%	100V
C631	1-126-160-11	ELECT	1uF	20%	50V
C636	1-124-916-11	ELECT	22uF	20%	63V
C641	1-124-927-11	ELECT	4. 7uF	20%	100V
C642	1-124-902-00	ELECT	0. 47uF	20%	50V
C645	1-124-907-11	ELECT	10uF	20%	50V
C646	1-124-925-11	ELECT	2. 2uF	20%	100V
C647	1-124-443-00	ELECT	100uF	20%	10V
C648	1-124-443-00	ELECT	100uF	20%	10V
C649	1-124-907-11	ELECT	10uF	20%	50V
C650	1-124-916-11	ELECT	22uF	20%	63V
C6035	1-163-141-00	CERAMIC CHIP	0. 001uF	5%	50V

< CONNECTOR >

CN601	1-750-585-11	CONNECTOR, FFC/FPC 7P	
CN602	1-580-783-11	CONNECTOR, BOARD TO BOARD	
CN603	1-750-585-11	CONNECTOR, FFC/FPC 7P	
CN604	1-580-783-11	CONNECTOR, BOARD TO BOARD	
CN605	1-580-783-11	CONNECTOR, BOARD TO BOARD	
* CN606	1-580-415-11	SOCKET, CONNECTOR 11P	
* CN607	1-568-862-11	SOCKET, CONNECTOR 19P	

< DIODE >

D602	8-719-422-91	DIODE	MA8091
D603	8-719-016-74	DIODE	1SS352
D604	8-719-016-74	DIODE	1SS352
D605	8-719-200-02	DIODE	10E2
D606	8-719-200-02	DIODE	10E2
D607	8-719-016-74	DIODE	1SS352
D608	8-719-016-74	DIODE	1SS352
D620	8-719-016-84	DIODE	02DZ2. 0-TPH3

< IC >

IC101	8-752-058-57	IC	CXA1599Q
IC102	8-759-998-71	IC	BA3308F
IC103	8-752-037-90	IC	CXA1331M
IC104	8-759-516-47	IC	CD4066BCM
IC601	8-759-259-60	IC	uPD78052-020
IC602	8-759-165-82	IC	PST600E-T
IC603	8-759-266-35	IC	TA8242AK
IC6004	8-759-009-06	IC	MC14052BF

< COIL >

L601	1-408-421-00	INDUCTOR	100uH
L6002	1-410-470-11	INDUCTOR	10uH

< TRANSISTOR >

Q101	8-729-602-21	TRANSISTOR	2SC4154-F
Q201	8-729-602-21	TRANSISTOR	2SC4154-F

TC MAIN

Ref. No.	Part No.	Description		Remark
Q601	8-729-901-06	TRANSISTOR	DTA144EK	
Q602	8-729-901-06	TRANSISTOR	DTA144EK	
Q603	8-729-140-75	TRANSISTOR	2SD999-CLCK	
Q604	8-729-140-75	TRANSISTOR	2SD999-CLCK	
Q605	8-729-805-41	TRANSISTOR	2SC3398	
Q606	8-729-602-36	TRANSISTOR	2SA1602-F	
Q607	8-729-805-45	TRANSISTOR	2SC3395	
Q608	8-729-805-45	TRANSISTOR	2SC3395	
Q609	8-729-805-45	TRANSISTOR	2SC3395	
Q610	8-729-805-65	TRANSISTOR	2SA1344	
Q611	8-729-602-21	TRANSISTOR	2SC4154-F	
Q612	8-729-602-36	TRANSISTOR	2SA1602-F	
Q613	8-729-901-06	TRANSISTOR	DTA144EK	
Q614	8-729-805-45	TRANSISTOR	2SC3395	
Q615	8-729-901-06	TRANSISTOR	DTA144EK	
Q616	8-729-901-06	TRANSISTOR	DTA144EK	
Q617	8-729-901-06	TRANSISTOR	DTA144EK	
Q627	8-729-805-45	TRANSISTOR	2SC3395	
Q630	8-729-805-65	TRANSISTOR	2SA1344	
Q680	8-729-805-41	TRANSISTOR	2SC3398	

< RESISTOR >

R106	1-216-050-00	METAL GLAZE	1.1K	5%	1/10W
R107	1-216-082-00	METAL GLAZE	24K	5%	1/10W
R108	1-216-043-00	METAL CHIP	560	5%	1/10W
R109	1-216-073-00	METAL CHIP	10K	5%	1/10W
R110	1-216-059-00	METAL CHIP	2.7K	5%	1/10W
R111	1-216-066-00	METAL CHIP	5.1K	5%	1/10W
R112	1-216-054-00	METAL GLAZE	1.6K	5%	1/10W
R113	1-216-079-00	METAL CHIP	18K	5%	1/10W
R114	1-216-057-00	METAL CHIP	2.2K	5%	1/10W
R115	1-216-105-00	METAL CHIP	220K	5%	1/10W
R116	1-216-689-11	METAL CHIP	39K	0.5%	1/10W
R117	1-216-049-00	METAL CHIP	1K	5%	1/10W
R118	1-216-093-00	METAL CHIP	68K	5%	1/10W
R119	1-216-049-00	METAL CHIP	1K	5%	1/10W
R120	1-216-025-00	METAL CHIP	100	5%	1/10W
R121	1-216-025-00	METAL CHIP	100	5%	1/10W
R128	1-216-089-91	METAL GLAZE	47K	5%	1/10W
R206	1-216-050-00	METAL GLAZE	1.1K	5%	1/10W
R207	1-216-082-00	METAL GLAZE	24K	5%	1/10W
R208	1-216-043-00	METAL CHIP	560	5%	1/10W
R209	1-216-073-00	METAL CHIP	10K	5%	1/10W
R210	1-216-059-00	METAL CHIP	2.7K	5%	1/10W
R211	1-216-066-00	METAL CHIP	5.1K	5%	1/10W
R212	1-216-054-00	METAL GLAZE	1.6K	5%	1/10W
R213	1-216-079-00	METAL CHIP	18K	5%	1/10W
R214	1-216-057-00	METAL CHIP	2.2K	5%	1/10W
R215	1-216-105-00	METAL CHIP	220K	5%	1/10W
R216	1-216-689-11	METAL CHIP	39K	0.5%	1/10W
R217	1-216-049-00	METAL CHIP	1K	5%	1/10W
R218	1-216-093-00	METAL CHIP	68K	5%	1/10W
R219	1-216-049-00	METAL CHIP	1K	5%	1/10W
R220	1-216-025-00	METAL CHIP	100	5%	1/10W
R221	1-216-025-00	METAL CHIP	100	5%	1/10W
R228	1-216-089-91	METAL GLAZE	47K	5%	1/10W
R504	1-216-025-00	METAL CHIP	100	5%	1/10W
R505	1-216-073-00	METAL CHIP	10K	5%	1/10W
R601	1-216-025-00	METAL CHIP	100	5%	1/10W
R602	1-216-025-00	METAL CHIP	100	5%	1/10W
R603	1-216-025-00	METAL CHIP	100	5%	1/10W
R604	1-216-025-00	METAL CHIP	100	5%	1/10W
R605	1-216-081-00	METAL CHIP	22K	5%	1/10W
R606	1-216-085-00	METAL CHIP	33K	5%	1/10W
R607	1-216-025-00	METAL CHIP	100	5%	1/10W
R612	1-216-105-00	METAL CHIP	220K	5%	1/10W
R614	1-216-105-00	METAL CHIP	220K	5%	1/10W
R615	1-216-025-00	METAL CHIP	100	5%	1/10W
R616	1-216-081-00	METAL CHIP	22K	5%	1/10W
R619	1-216-081-00	METAL CHIP	22K	5%	1/10W
R620	1-216-097-00	METAL CHIP	100K	5%	1/10W
R621	1-216-049-00	METAL CHIP	1K	5%	1/10W
R622	1-216-057-00	METAL CHIP	2.2K	5%	1/10W
R623	1-216-057-00	METAL CHIP	2.2K	5%	1/10W
R624	1-216-083-00	METAL CHIP	27K	5%	1/10W
R625	1-216-057-00	METAL CHIP	2.2K	5%	1/10W
R626	1-216-057-00	METAL CHIP	2.2K	5%	1/10W
R627	1-216-057-00	METAL CHIP	2.2K	5%	1/10W
R628	1-216-083-00	METAL CHIP	27K	5%	1/10W
R629	1-216-057-00	METAL CHIP	2.2K	5%	1/10W
R630	1-216-073-00	METAL CHIP	10K	5%	1/10W
R631	1-216-057-00	METAL CHIP	2.2K	5%	1/10W
R632	1-216-073-00	METAL CHIP	10K	5%	1/10W
R633	1-216-025-00	METAL CHIP	100	5%	1/10W
R634	1-216-025-00	METAL CHIP	100	5%	1/10W
R635	1-216-059-00	METAL CHIP	2.7K	5%	1/10W
R636	1-216-059-00	METAL CHIP	2.7K	5%	1/10W
R637	1-216-059-00	METAL CHIP	2.7K	5%	1/10W
R638	1-216-089-91	METAL GLAZE	47K	5%	1/10W
R639	1-216-073-00	METAL CHIP	10K	5%	1/10W
R640	1-216-295-91	METAL GLAZE	0	5%	1/10W
R641	1-216-295-91	METAL GLAZE	0	5%	1/10W
R642	1-216-295-91	METAL GLAZE	0	5%	1/10W
R643	1-216-025-00	METAL CHIP	100	5%	1/10W
R644	1-216-025-00	METAL CHIP	100	5%	1/10W
R645	1-216-077-00	METAL CHIP	15K	5%	1/10W
R646	1-216-055-00	METAL CHIP	1.8K	5%	1/10W

Ref. No.	Part No.	Description			Remark
R647	1-216-057-00	METAL CHIP	2.2K	5%	1/10W
R648	1-216-089-91	METAL GLAZE	47K	5%	1/10W
R649	1-216-089-91	METAL GLAZE	47K	5%	1/10W
R650	1-216-089-91	METAL GLAZE	47K	5%	1/10W
R651	1-216-025-00	METAL CHIP	100	5%	1/10W
R652	1-216-025-00	METAL CHIP	100	5%	1/10W
R653	1-216-025-00	METAL CHIP	100	5%	1/10W
R654	1-216-025-00	METAL CHIP	100	5%	1/10W
R655	1-216-025-00	METAL CHIP	100	5%	1/10W
R656	1-216-001-00	METAL CHIP	10	5%	1/10W
R660	1-216-049-00	METAL CHIP	1K	5%	1/10W
R661	1-216-083-00	METAL CHIP	27K	5%	1/10W
R670	1-216-085-00	METAL CHIP	33K	5%	1/10W
R671	1-216-081-00	METAL CHIP	22K	5%	1/10W
R672	1-216-085-00	METAL CHIP	33K	5%	1/10W
R673	1-216-073-00	METAL CHIP	10K	5%	1/10W
R674	1-216-078-00	METAL GLAZE	16K	5%	1/10W
R675	1-216-073-00	METAL CHIP	10K	5%	1/10W
R676	1-216-083-00	METAL CHIP	27K	5%	1/10W
R677	1-216-025-00	METAL CHIP	100	5%	1/10W
R678	1-216-025-00	METAL CHIP	100	5%	1/10W
R679	1-216-025-00	METAL CHIP	100	5%	1/10W
R681	1-216-073-00	METAL CHIP	10K	5%	1/10W
R682	1-216-073-00	METAL CHIP	10K	5%	1/10W
R683	1-216-073-00	METAL CHIP	10K	5%	1/10W
R684	1-216-041-00	METAL CHIP	470	5%	1/10W
R685	1-216-073-00	METAL CHIP	10K	5%	1/10W
R686	1-216-073-00	METAL CHIP	10K	5%	1/10W
R687	1-216-049-00	METAL CHIP	1K	5%	1/10W
R689	1-216-090-00	METAL CHIP	51K	5%	1/10W
R690	1-216-073-00	METAL CHIP	10K	5%	1/10W
R691	1-216-069-00	METAL CHIP	6.8K	5%	1/10W
R692	1-216-081-00	METAL CHIP	22K	5%	1/10W
R693	1-216-083-00	METAL CHIP	27K	5%	1/10W
R694	1-216-083-00	METAL CHIP	27K	5%	1/10W
R695	1-216-057-00	METAL CHIP	2.2K	5%	1/10W
R696	1-216-057-00	METAL CHIP	2.2K	5%	1/10W
R697	1-216-073-00	METAL CHIP	10K	5%	1/10W
R700	1-216-121-00	METAL CHIP	1M	5%	1/10W
R701	1-216-073-00	METAL CHIP	10K	5%	1/10W
R702	1-216-082-00	METAL GLAZE	24K	5%	1/10W
R6070	1-216-057-00	METAL CHIP	2.2K	5%	1/10W
R6071	1-216-057-00	METAL CHIP	2.2K	5%	1/10W

< VARIABLE RESISTOR >

RV101	1-241-785-11	RES, ADJ, CARBON 10K
RV201	1-241-785-11	RES, ADJ, CARBON 10K

Ref. No.	Part No.	Description	Remark
		< TEST PIN >	
* TP601	1-564-718-11	PIN, CONNECTOR (SMALL TYPE) 2P	
		< VIBRATOR >	
X601	1-577-358-21	VIBRATOR, CERAMIC (4MHz)	

****

MISCELLANEOUS

****

5	1-765-405-11	WIRE (FLAT TYPE) (19 CORE)
6	1-751-819-11	WIRE (FLAT TYPE) (5 CORE)
15	1-765-404-11	WIRE (FLAT TYPE) (7 CORE)
21	1-751-821-11	WIRE (FLAT TYPE) (11 CORE)
117	1-638-983-11	MOTOR FLEXIBLE BOARD
HP101	A-2003-757-A	BASE ASSY, HEAD (DECK A)
HRPE101	A-2003-930-A	BASE ASSY, HEAD (DECK B)
M101A	X-3363-501-2	MOTOR ASSY (REEL) (DECK A)
M101B	X-3363-501-2	MOTOR ASSY (REEL) (DECK B)
M102A	X-3365-377-1	MOTOR ASSY (CAPSTAN) (DECK A)
M102B	X-3365-377-1	MOTOR ASSY (CAPSTAN) (DECK B)

****

****

HARDWARE LIST

****

#1	7-621-770-67	SCREW +PTT 2.6X6 (S)
#2	7-621-773-93	SCREW (PANEL 2.6 TP2)
#3	7-621-775-00	SCREW +B 2.6X3
#4	7-621-849-00	SCREW, TAPPING
#5	7-627-556-08	SCREW +P 2.6X2.8
#6	7-682-547-09	SCREW +BVTT 3X6 (S)
#7	7-685-646-79	SCREW +BVTP 3X8 TYPE2 N-S
#8	7-685-780-01	SCREW +PTT 2X3 (S)

English
94E0575-1
Printed in Japan
© 1994. 5

9-959-587-11

Sony Corporation
Consumer A&V Products Company
Home A&V Products Div.

Published by Home A&V Products Div.
Quality Engineering Dept.

TA-H5900

SERVICE MANUAL

AEP Model
UK Model
E Model
Australian Model
Tourist Model

TA-H5900 is the integrated stereo amplifier section in the HiFi component system MHC-5900/E90X.

SPECIFICATIONS

(When in Dolby Surround mode)
Continuous RMS power output
- FRONT: 60 + 60 watts (6 ohms at 1 kHz, DIN)
- CENTER: 10 watts (8 ohms at 1 kHz, DIN)
- REAR: 5 + 5 watts (8 ohms at 1 kHz, DIN)
- FRONT: 70 + 70 watts (6 ohms at 1 kHz, 5% THD)
- CENTER: 15 watts (8 ohms at 1 kHz, 5% THD)
- REAR: 7.5 + 7.5 watts (8 ohms at 1 kHz, 5% THD)

(When not in Dolby Surround mode)
Continuous RMS power output
- FRONT: 60 + 60 watts (6 ohms at 1 kHz, DIN)
- REAR: 10 + 10 watts (8 ohms at 1 kHz, DIN)
- FRONT: 70 + 70 watts (6 ohms at 1 kHz, 5% THD)
- REAR: 15 + 15 watts (8 ohms at 1 kHz, 5% THD)

Inputs
- MIX MIC (minijack): Sensitivity 1 mV, impedance 10 kilohms

Outputs
- HEADPHONES (stereo minijack): accepts headphones of 8 ohms or more
- FRONT SPEAKER: accepts speakers of 6 to 16 ohms
- REAR SPEAKER (phono jack): accepts speakers of 8 to 16 ohms
- CENTER SPEAKER (phono jack): accepts speakers of 8 to 16 ohms

Dimensions
Approx. 225 x 125 x 285 mm (w/h/d) (8 7/8 x 5 x 11 1/4 inches)

Mass Approx. 4.4 kg (9 lb 12 oz)

General

Destination	Power requirements
UK	240 V AC, 50 Hz
AE	220 – 230V AC, 50/60 Hz
Except AEP, UK	110 – 120 V or 220 – 240 V AC adjustable, 50/60 Hz

Design and specifications subject to change without notice.

Dolby noise reduction manufactured under license from Dolby Laboratories Licensing Corporation.
"DOLBY" and the double-D symbol ⧈ are trademarks of Dolby Laboratories Licensing Corporation.

INTEGRATED STEREO AMPLIFIER

SONY®

TABLE OF CONTENTS

Section	*Title*	*Page*
	Specifications	1
	Model Identification	2
1.	**GENERAL**	
	Index to Parts and Controls	3
2.	**DIAGRAMS**	
2-1.	Block Diagram	4
2-2.	Printed Wiring Boards	9
2-3.	Schematic Diagram	13
3.	**EXPLODED VIEWS**	19
4.	**ELECTRICAL PARTS LIST**	21

MODEL IDENTIFICATION

– Specification Label –

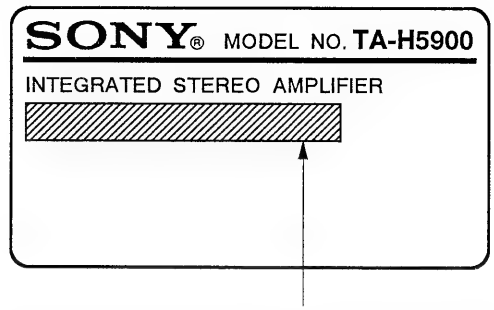

AEP model: AC: 220 – 230 V ~50/60 Hz 170 W
UK model: AC: 240 V ~50/60 Hz
EXCEPT AEP, UK model:
AC: 110 – 120/220 – 240 V ~50/60 Hz 170 W

Note :

There are two type of AEP models which are depend on countries.

AEP2 model : Model for Scandinavian countries, Switzerland, Spain and Portugal

AEP1 model : Model for other European countries

SAFETY-RELATED COMPONENT WARNING!!

COMPONENTS IDENTIFIED BY MARK ⚠ OR DOTTED LINE WITH MARK ⚠ ON THE SCHEMATIC DIAGRAMS AND IN THE PARTS LIST ARE CRITICAL TO SAFE OPERATION. REPLACE THESE COMPONENTS WITH SONY PARTS WHOSE PART NUMBERS APPEAR AS SHOWN IN THIS MANUAL OR IN SUPPLEMENTS PUBLISHED BY SONY.

SECTION 1
GENERAL

This section is extracted from MHC-5900 instruction manual.

Index to Parts and Controls

Refer to the pages indicated in parentheses for details on how to use the controls. Controls with an asterisk have indicators on themselves.

Integrated stereo amplifier section

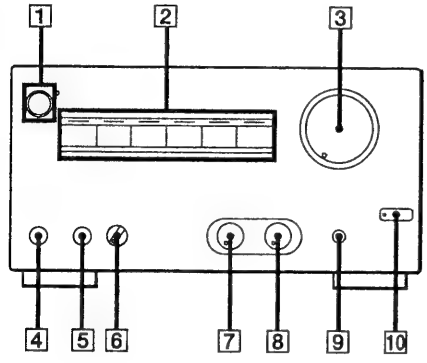

1 SYSTEM POWER switch and ON/STANDBY indicator
The indicator remains lit as long as the AC power cord is connected to a wall outlet.
2 FUNCTION buttons*
VIDEO 1
MD/DAT/VIDEO 2
TAPE
CD
TUNER
PHONO
3 VOLUME control*
4 HEADPHONES jack (stereo minijack)

5 MIX MIC jack (minijack)
6 MIC LEVEL control
7 DBS FREQUENCY control
8 DBS LEVEL control
9 Remote sensor
10 MUTING button*

Remote commander

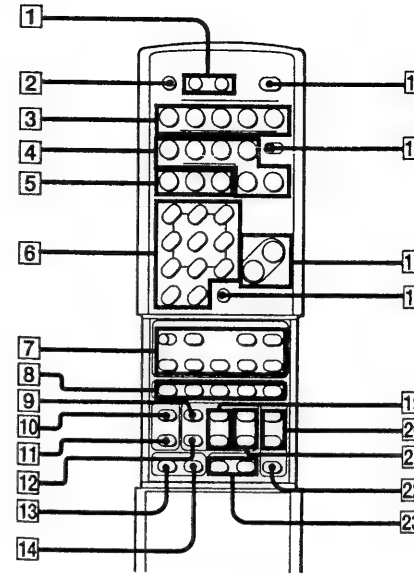

1 TAPE DECK A/B buttons
2 SLEEP button
3 CD/MD operating buttons
4 Cassette deck operating buttons
5 Tuner operating buttons
6 CD/Tuner/numeric buttons
7 VCR operating buttons
8 TV operating buttons
9 PRO LOGIC button
10 AUDIO FUNCTION button
11 VIDEO FUNCTION button
12 TEST TONE button
13 CHECK button
14 CLEAR button
15 SYSTEM POWER switch
16 CD/MD switch
17 VOLUME +/– buttons
18 MUTING button (20)
19 REAR LEVEL +/– buttons
20 MENU 1, 2 button
21 CENTER LEVEL +/– buttons
22 DIRECT button
23 BALANCE L/R button

SECTION 2
DIAGRAMS

2-1. BLOCK DIAGRAM

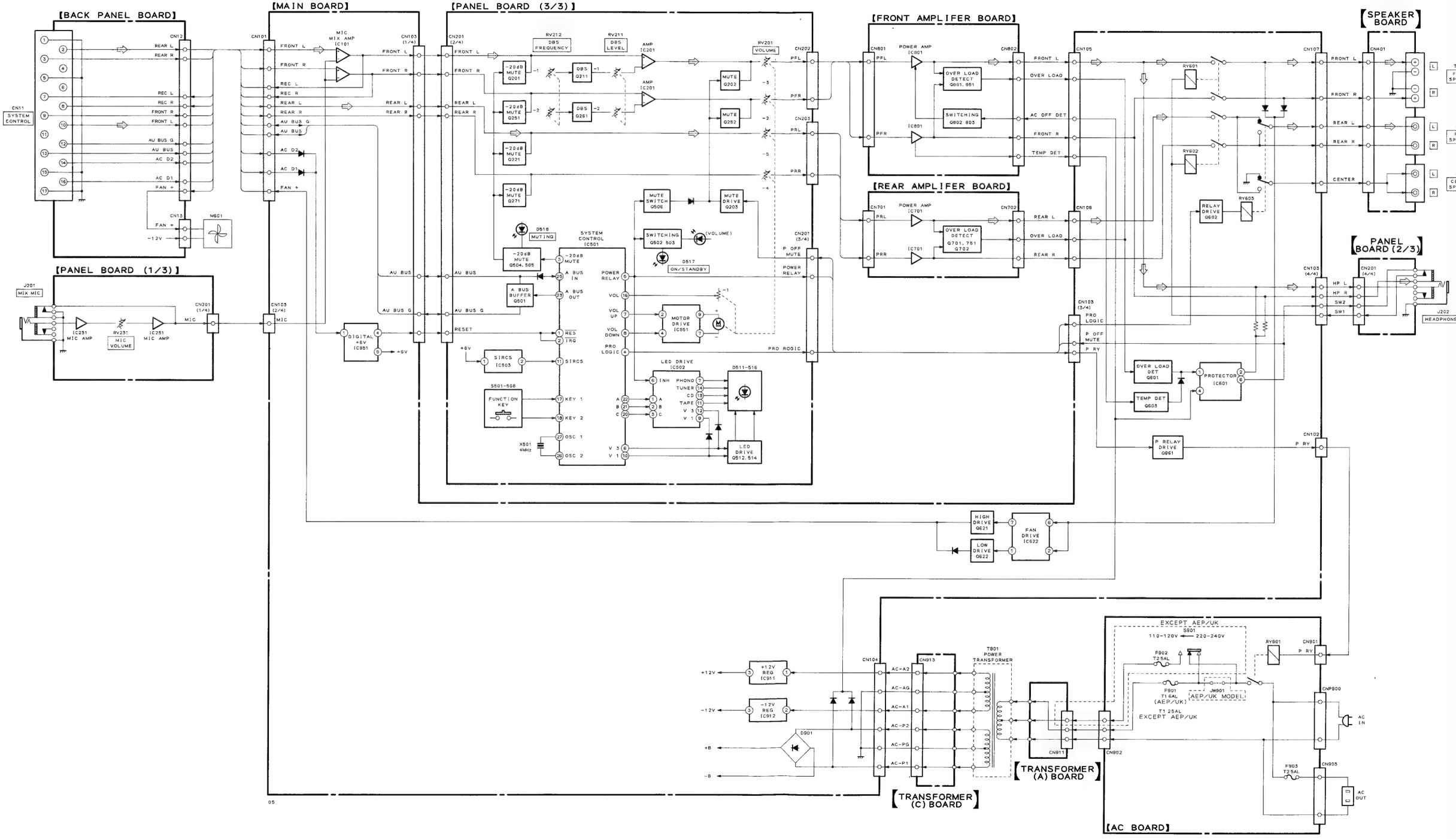

- **Circuit Boards Location**

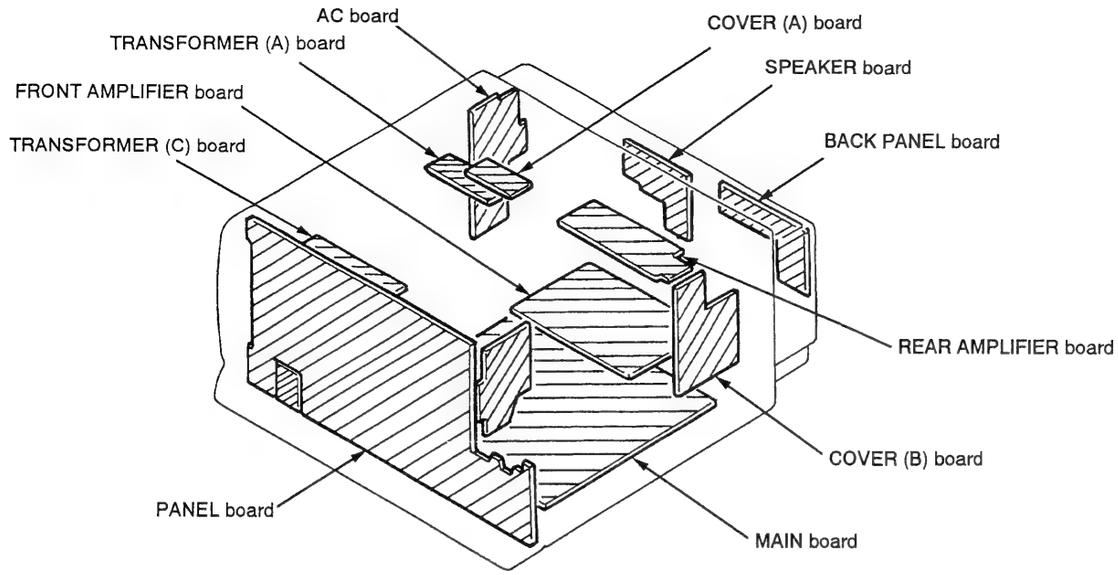

IC Block Diagrams

IC551 LB1638M

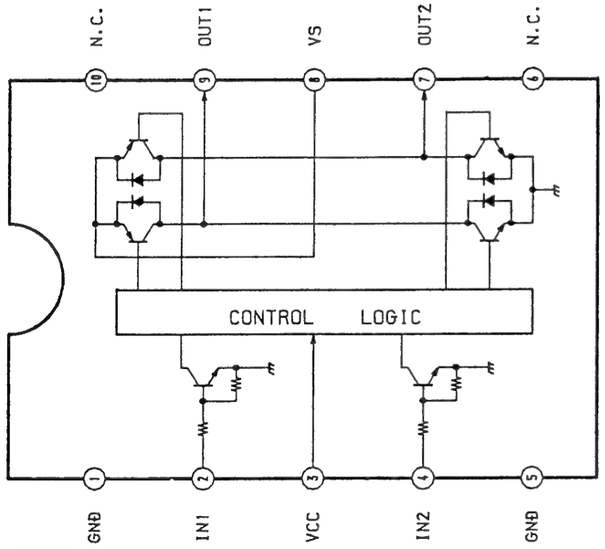

IC701 STK-4122MK2
IC801 STK-4172MK2

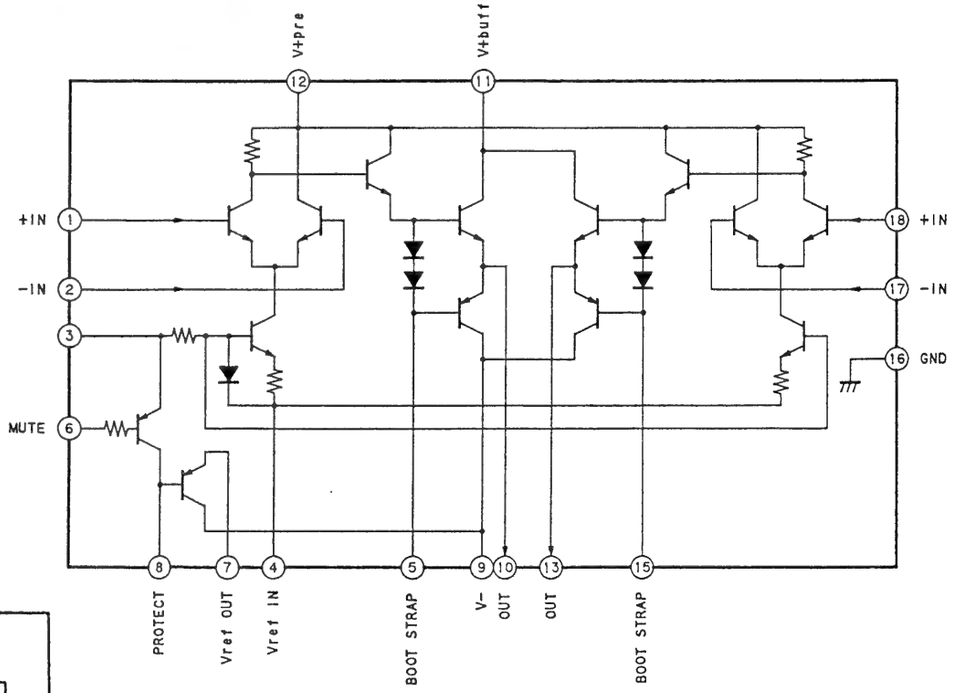

IC601 UPC1237HA

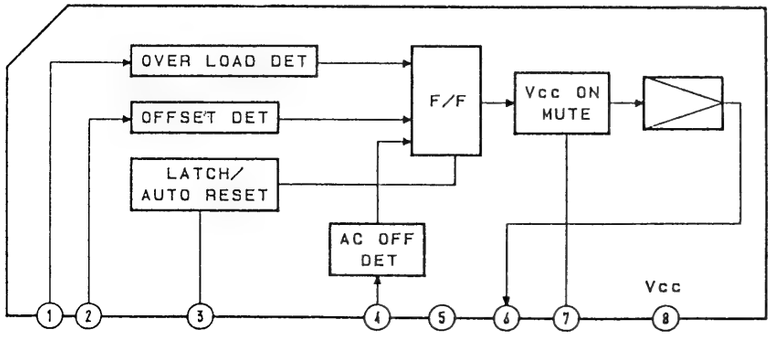

TA-H5900

• Semiconductor Lead Layouts

GP1US7XB

2SC1841-PAFAEA

RBA-402

M5218AL
UPC1237HA

STK-4122MK2
STK-4152MK2K

UZL-15M

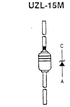

TA7812S-LC

1N4148M
10E2

TA7912S-LC

11ES2

DTA124ES
DTA144WS
DTC124ES
2SC2603-EF

SEL5220S-TP15
SEL5620C-TP15

2SA1175-HFE
2SC3623A-LK

SML16760CN-TP4

2SB1116

• Semiconductor Location

Ref. No.	Location	Ref. No.	Location
D201	G-19	Q201	G-21
D501	F-19	Q202	G-20
D502	I-17	Q203	G-20
D503	H-20	Q211	H-21
D504	E-21	Q221	E-19
D505	E-22	Q251	G-21
D511	F-19	Q252	G-21
D512	F-20	Q261	H-21
D513	F-21	Q271	E-18
D514	E-21	Q501	I-18
D515	E-22	Q502	G-19
D516	E-23	Q503	G-19
D517	E-23	Q504	H-17
D518	H-16	Q505	H-17
D551	F-17	Q506	G-19
D601	D-8	Q512	H-20
D602	C-9	Q514	E-23
D603	C-9	Q601	D-8
D604	C-10	Q602	C-10
D605	F-8	Q603	D-8
D606	D-8	Q621	D-7
D621	E-10	Q622	C-7
D622	E-10	Q701	C-16
D623	C-8	Q702	B-16
D624	D-7	Q751	C-16
D625	D-7	Q801	C-23
D626	C-7	Q802	C-23
D627	C-7	Q803	C-23
D741	C-18	Q851	C-21
D801	B-22	Q961	E-8
D851	B-21		
D900	C-2		
D901	F-12		
D902	F-11		
D903	F-11		
D911	G-14		
D912	G-14		
D913	G-13		
D914	G-13		
D951	E-7		
D952	E-8		
IC101	G-8		
IC201	G-21		
IC231	G-23		
IC501	H-18		
IC502	H-19		
IC503	H-17		
IC551	F-16		
IC601	D-8		
IC621	C-7		
IC701	B-17		
IC801	A-22		
IC911	G-9		
IC912	F-9		
IC951	D-7		

Note:
• ○—— : parts extracted from the component side.

2-2. PRINTED WIRING BOARDS • See page 6 for Circuit Boards Location.

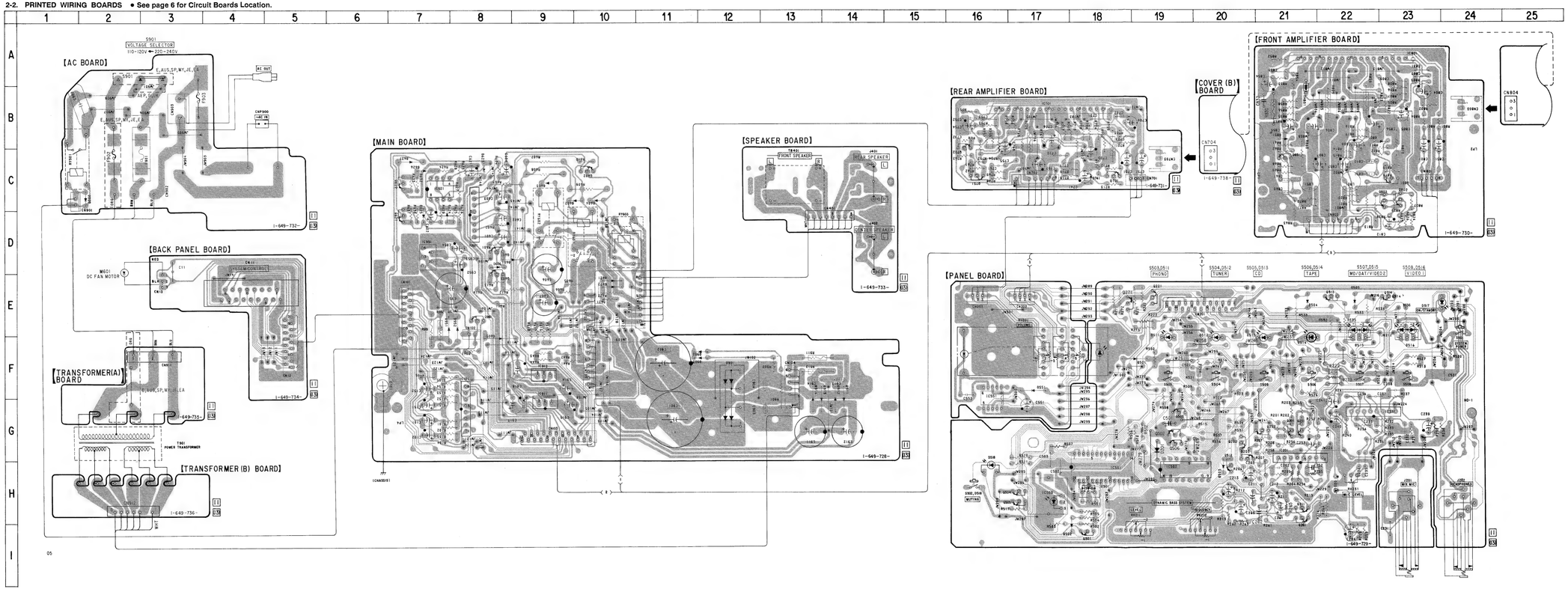

2-3. SCHEMATIC DIAGRAM • See page 6 for IC Block Diagrams.

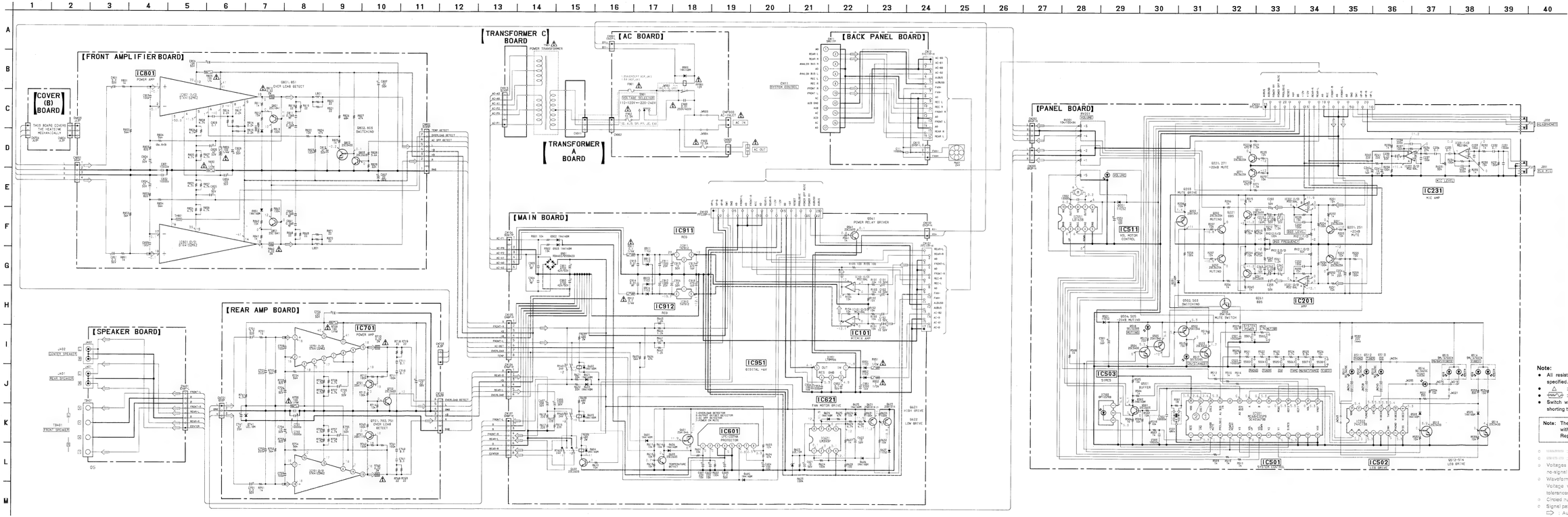

SECTION 3
EXPLODED VIEWS

NOTE:

- -XX and -X mean standardized parts, so they may have some difference from the original one.
- Color Indication of Appearance Parts
  Example:
  KNOB, BALANCE (WHITE) . . . (RED)
  ↑ ↑
  Parts Color Cabinet's Color
- Items marked "*" are not stocked since they are seldom required for routine service. Some delay should be anticipated when ordering these items.
- The mechanical parts with no reference number in the exploded views are not supplied.
- Hardware (# mark) list and accessories and packing materials are given in the last of the electrical parts list.

The components identified by mark ⚠ or dotted line with mark ⚠ are critical for safety.
Replace only with part number specified.

(1) FRONT PANEL ASSEMBLY SECTION

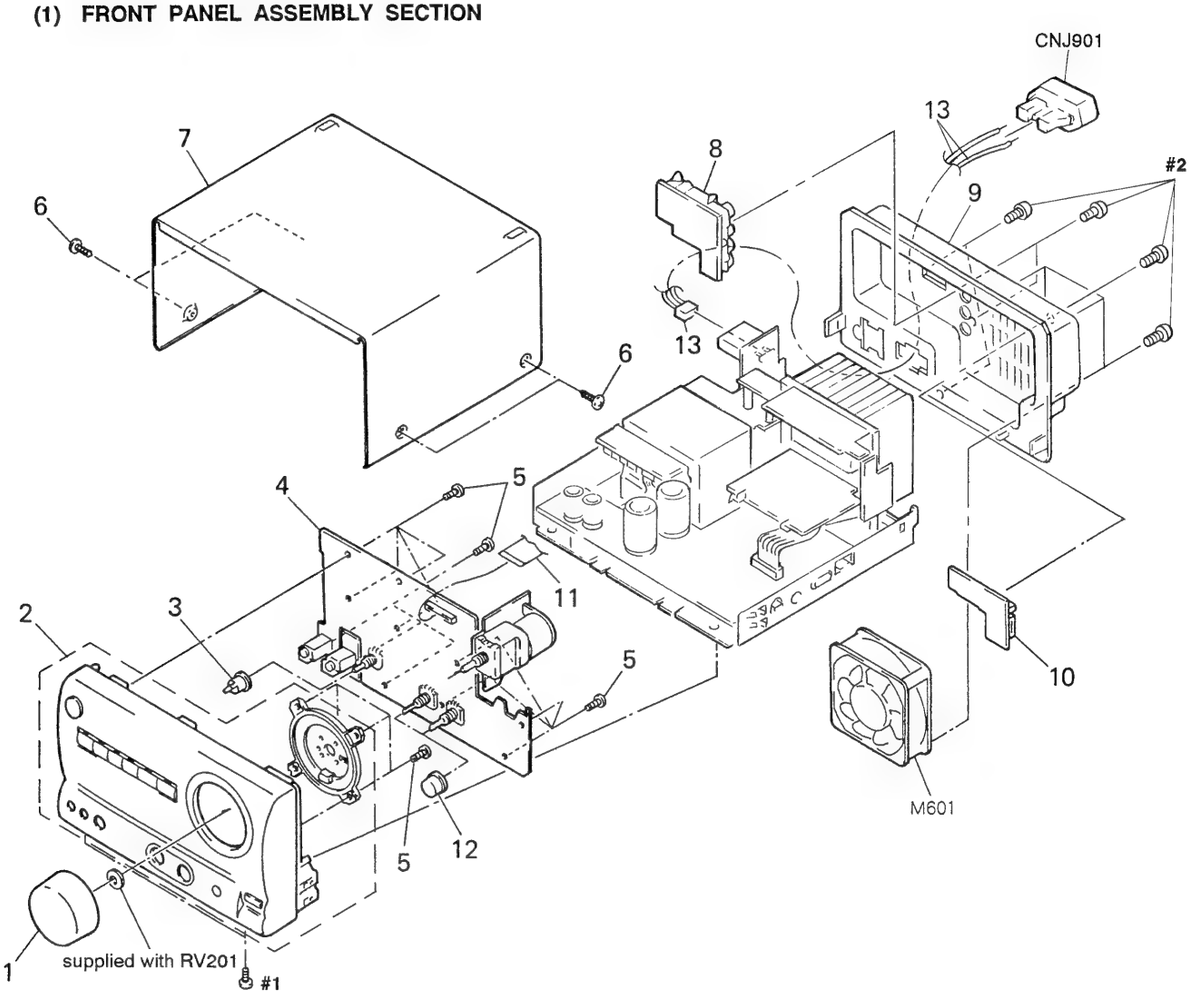

Ref. No.	Part No.	Description	Remark
1	X-4944-094-1	KNOB (VOLUME) ASSY	
2	X-4944-673-1	PANEL ASSY, FRONT (AEP, UK)	
2	X-4944-674-1	PANEL ASSY, FRONT (EXCEPT UK)	
3	4-961-911-01	KNOB (MICROPHONE)	
* 4	A-4369-274-A	PANEL BOARD, COMPLETE (EXCEPT UK)	
* 4	A-4369-275-A	PANEL BOARD, COMPLETE (UK)	
5	4-951-620-01	SCREW (2.6X8), +BVTP	
6	3-363-099-21	SCREW (CASE 3 TP2)	
7	4-961-519-21	CASE	
* 8	1-649-733-11	SPEAKER BOARD	
* 9	4-954-256-61	PANEL, BACK (AEP, UK)	
* 9	4-954-256-71	PANEL, BACK (EXCEPT AEP, UK)	
* 10	1-649-734-11	BACK PANEL BOARD	
11	1-751-718-11	WIRE (FLAT TYPE) (23 CORE)	
12	4-961-912-01	KNOB (DBFB)	
13	1-751-216-31	LEAD (WITH CONNECTOR) (2 CORE)	
⚠CNJ901	1-526-794-11	OUTLET, AC	
M601	1-698-209-11	MOTOR, DC FAN	

(2) CHASSIS SECTION

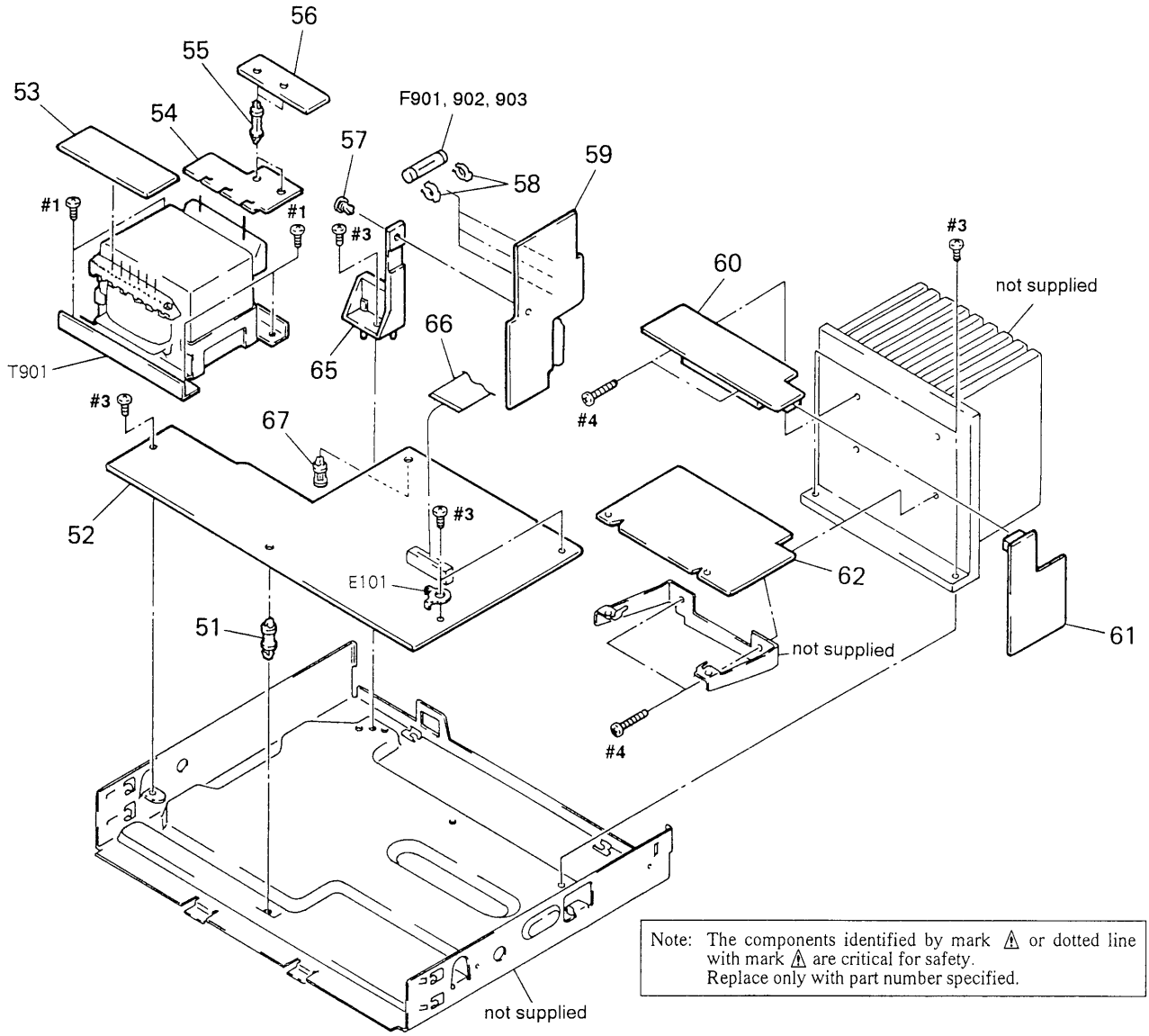

Note: The components identified by mark ⚠ or dotted line with mark ⚠ are critical for safety.
Replace only with part number specified.

Ref. No.	Part No.	Description	Remark
* 51	3-682-419-71	HOLDER, PCB	
* 52	A-4369-271-A	MAIN BOARD, COMPLETE (AEP)	
* 52	A-4369-272-A	MAIN BOARD, COMPLETE (UK)	
* 52	A-4369-273-A	MAIN BOARD, COMPLETE (EXCEPT AEP, UK)	
* 53	1-651-466-11	TRANSFORMER (C) BOARD	
* 54	1-649-735-11	TRANSFORMER (A) BOARD	
* 55	4-385-948-01	HOLDER, PCB	
* 56	1-649-737-11	COVER (A) BOARD	
57	4-812-134-11	RIVET NYLON, 3.5	
58	1-533-293-11	FUSE HOLDER	
* 59	A-4369-286-A	AC BOARD, COMPLETE (E, JE)	
* 59	1-649-732-11	AC BOARD (EXCEPT E, JE)	
* 60	A-4369-279-A	REAR AMPLIFIER BOARD, COMPLETE (AEP)	
* 60	A-4369-280-A	REAR AMPLIFIER BOARD, COMPLETE (UK)	
* 60	A-4369-281-A	REAR AMPLIFIER BOARD, COMPLETE (EXCEPT AEP, UK)	
* 61	1-649-738-11	COVER (B) BOARD	

Ref. No.	Part No.	Description	Remark
* 62	A-4369-276-A	FRONT AMPLIFIER BOARD, COMPLETE (AEP)	
* 62	A-4369-277-A	FRONT AMPLIFIER BOARD, COMPLETE (UK)	
* 62	A-4369-278-A	FRONT AMPLIFIER BOARD, COMPLETE (EXCEPT AEP, UK)	
* 65	4-954-242-01	BRACKET (IN)	
66	1-751-717-11	WIRE (FLAT TYPE) (17 CORE)	
* 67	3-669-610-00	SPACER	
* E101	4-942-204-01	PLATE, GROUND	
⚠F901	1-532-285-00	FUSE (T1.25A 250V) (EXCEPT AEP, UK)	
⚠F901	1-532-286-00	FUSE (T2.5A 250V) (AEP, UK)	
⚠F902	1-532-286-00	FUSE (T2.5A 250V) (EXCEPT AEP, UK)	
⚠F903	1-532-259-00	FUSE (T1.6A 250V) (AEP, UK)	
⚠F903	1-532-286-00	FUSE (T2.5A 250V) (EXCEPT AEP, UK)	
⚠T901	1-426-683-11	TRANSFORMER, POWER (AEP)	
⚠T901	1-426-684-11	TRANSFORMER, POWER (UK)	
⚠T901	1-426-685-11	TRANSFORMER, POWER (EXCEPT AEP, UK)	

SECTION 4
ELECTRICAL PARTS LIST

AC | BACK PANEL | COVER (A) | COVER (B) | FRONT AMPLIFIER

NOTE:
- Due to standardization, replacements in the parts list may be different from the parts specified in the diagrams or the components used on the set.
- -XX and -X mean standardized parts, so they may have some difference from the original one.
- RESISTORS
  All resistors are in ohms.
  METAL:Metal-film resistor.
  METAL OXIDE: Metal oxide-film resistor.
  F:nonflammable
- Items marked "*" are not stocked since they are seldom required for routine service. Some delay should be anticipated when ordering these items.
- SEMICONDUCTORS
  In each case, u:μ, for example:
  uA..: μA.. uPA..: μPA..
  uPB..: μPB.. uPC..: μPC.. uPD..: μPD..
- CAPACITORS
  uF: μF
- COILS
  uH: μH
- Abbreviation
  JE: Tourist

The components identified by mark ⚠ or dotted line with mark. ⚠ are critical for safety. Replace only with part number specified.

When indicating parts by reference number, please include the board.

Ref. No.	Part No.	Description			Remark
*	A-4369-286-A	AC BOARD, COMPLETE (E, JE)			
		**********			
*	1-649-732-11	AC BOARD (EXCEPT E, JE)			
		********			
	1-533-293-11	FUSE HOLDER			
		< CAPACITOR >			
⚠C900	1-161-744-51	CERAMIC	0.01uF		400V
		< CONNECTOR >			
CN901	1-564-517-11	PLUG, CONNECTOR 2P			
CN902	1-765-186-21	LEAD (WITH CONNECTOR) (3 CORE)			(EXCEPT AEP, UK)
CN902	1-751-206-31	LEAD (WITH CONNECTOR) (2 CORE) (AEP, UK)			
CN903	1-564-321-00	PIN, CONNECTOR 2P			
		< CONNECTOR >			
⚠CNP900	1-526-930-11	INLET, AC (~ AC IN) (E, JE)			
⚠CNP900	1-526-931-11	INLET, AC (~ AC IN) (EXCEPT E, JE)			
		< DIODE >			
D900	8-719-987-63	DIODE 1N4148M			
		< FUSE >			
⚠F901	1-532-285-00	FUSE (T1.25A 250V) (EXCEPT AEP, UK)			
⚠F901	1-532-259-00	FUSE (T1.6A 250V) (AEP, UK)			
⚠F902	1-532-286-00	FUSE (T2.5A 250V) (EXCEPT AEP, UK)			
⚠F903	1-532-286-00	FUSE (T2.5A 250V)			
		< RELAY >			
⚠RY901	1-515-738-11	RELAY, POWER			
		< SWITCH >			
⚠S901	1-572-675-11	SWITCH, POWER VOLTAGE CHANGE (VOLTAGE SELECTOR) (EXCEPT AEP, UK)			
**********					
*	1-649-734-11	BACK PANEL BOARD			
		**********			
		< CAPACITOR >			
C11	1-164-159-11	CERAMIC	0.1uF		50V
		< CONNECTOR >			
* CN11	1-580-740-11	SOCKET, CONNECTOR 17P			
* CN12	1-568-836-11	SOCKET, CONNECTOR 17P			
* CN13	1-564-518-11	PLUG, CONNECTOR 3P			
**********					
*	1-649-737-11	COVER (A) BOARD			
		**********			
**********					
*	1-649-738-11	COVER (B) BOARD			
		**********			
**********					
*	A-4369-276-A	FRONT AMPLIFIER BOARD, COMPLETE (AEP)			
		**********			
*	A-4369-277-A	FRONT AMPLIFIER BOARD, COMPLETE (UK)			
		**********			
*	A-4369-278-A	FRONT AMPLIFIER BOARD, COMPLETE			
		**********			(EXCEPT AEP, UK)
		< CAPACITOR >			
C801	1-124-257-00	ELECT	2.2uF	20%	50V
C803	1-162-282-31	CERAMIC	100PF	10%	50V
C804	1-124-910-11	ELECT	47uF	20%	50V
C805	1-124-910-11	ELECT	47uF	20%	50V
C806	1-124-122-11	ELECT	100uF	20%	50V
C807	1-124-916-11	ELECT	22uF	20%	63V
C808	1-124-916-11	ELECT	22uF	20%	63V
C809	1-164-159-11	CERAMIC	0.1uF		50V
C810	1-136-163-00	FILM	0.068uF	5%	50V
C811	1-136-163-00	FILM	0.068uF	5%	50V

FRONT AMPLIFIER

Ref. No.	Part No.	Description			Remark
C812	1-124-910-11	ELECT	47uF	20%	50V
C831	1-161-379-00	CERAMIC	0.01uF	20%	25V
C832	1-161-379-00	CERAMIC	0.01uF	20%	25V
C851	1-124-257-00	ELECT	2.2uF	20%	50V
C853	1-162-282-31	CERAMIC	100PF	10%	50V
C854	1-124-910-11	ELECT	47uF	20%	50V
C855	1-124-910-11	ELECT	47uF	20%	50V
C856	1-124-122-11	ELECT	100uF	20%	50V
C857	1-124-916-11	ELECT	22uF	20%	63V
C860	1-136-163-00	FILM	0.068uF	5%	50V
C861	1-136-163-00	FILM	0.068uF	5%	50V
		< CONNECTOR >			
* CN803	1-569-499-11	PIN, CONNECTOR 3P			
CN804	1-569-490-11	SOCKET, CONNECTOR 3P			
		< DIODE >			
D801	8-719-987-63	DIODE 1N4148M			
D851	8-719-987-63	DIODE 1N4148M			
		< IC >			
IC801	8-749-920-10	IC STK4172MK2			
		< COIL >			
L801	1-420-872-00	COIL, AIR CORE			
L851	1-420-872-00	COIL, AIR CORE			
		< TRANSISTOR >			
Q801	8-729-140-84	TRANSISTOR 2SC1841-PAFAEA			
Q802	8-729-900-36	TRANSISTOR DTC124ES			
Q803	8-729-620-05	TRANSISTOR 2SC2603-EF			
Q851	8-729-140-84	TRANSISTOR 2SC1841-PAFAEA			
		< RESISTOR >			
R801	1-249-417-11	CARBON	1K	5%	1/4W F
R802	1-249-438-11	CARBON	56K	5%	1/4W
R803	1-249-416-11	CARBON	820	5%	1/4W F
R804	1-249-438-11	CARBON	56K	5%	1/4W
R805	1-249-425-11	CARBON	4.7K	5%	1/4W F
R806	1-249-425-11	CARBON	4.7K	5%	1/4W F
R807	1-249-425-11	CARBON	4.7K	5%	1/4W F
R808	1-249-425-11	CARBON	4.7K	5%	1/4W F
⚠R809	1-212-881-11	FUSIBLE	100	5%	1/4W F
⚠R810	1-217-151-00	RES, METAL PLATE			0.22
R811	1-249-417-11	CARBON	1K	5%	1/4W F
R812	1-249-431-11	CARBON	15K	5%	1/4W
R813	1-249-441-11	CARBON	100K	5%	1/4W
R814	1-249-421-11	CARBON	2.2K	5%	1/4W F

Ref. No.	Part No.	Description			Remark
R815	1-249-421-11	CARBON	2.2K	5%	1/4W F
R816	1-249-421-11	CARBON	2.2K	5%	1/4W F
R817	1-249-421-11	CARBON	2.2K	5%	1/4W F
R818	1-249-397-11	CARBON	22	5%	1/4W F
R819	1-249-397-11	CARBON	22	5%	1/4W F
R820	1-249-397-11	CARBON	22	5%	1/4W F
R821	1-249-397-11	CARBON	22	5%	1/4W F
R822	1-249-429-11	CARBON	10K	5%	1/4W
R823	1-247-881-00	CARBON	120K	5%	1/4W
R824	1-249-437-11	CARBON	47K	5%	1/4W
R825	1-249-417-11	CARBON	1K	5%	1/4W F
R826	1-249-439-11	CARBON	68K	5%	1/4W
R827	1-249-437-11	CARBON	47K	5%	1/4W
R828	1-249-426-11	CARBON	5.6K	5%	1/4W
R829	1-249-433-11	CARBON	22K	5%	1/4W
R830	1-212-934-00	FUSIBLE	1	5%	1/2W F
R851	1-249-417-11	CARBON	1K	5%	1/4W F
R852	1-249-438-11	CARBON	56K	5%	1/4W
R853	1-249-416-11	CARBON	820	5%	1/4W F
R854	1-249-438-11	CARBON	56K	5%	1/4W
R855	1-249-425-11	CARBON	4.7K	5%	1/4W F
R856	1-249-425-11	CARBON	4.7K	5%	1/4W F
R857	1-249-425-11	CARBON	4.7K	5%	1/4W F
R858	1-249-425-11	CARBON	4.7K	5%	1/4W F
⚠R859	1-212-881-11	FUSIBLE	100	5%	1/4W F
⚠R860	1-217-151-00	RES, METAL PLATE			0.22
R861	1-249-417-11	CARBON	1K	5%	1/4W F
R862	1-249-431-11	CARBON	15K	5%	1/4W
R863	1-249-441-11	CARBON	100K	5%	1/4W
R868	1-249-397-11	CARBON	22	5%	1/4W F
R869	1-249-397-11	CARBON	22	5%	1/4W F
R870	1-249-397-11	CARBON	22	5%	1/4W F
R871	1-249-397-11	CARBON	22	5%	1/4W F
		< THERMISTOR >			
TH801	1-807-796-11	THERMISTOR			

****

The components identified by mark ⚠ or dotted line with mark. ⚠ are critical for safety. Replace only with part number specified.

Ref. No.	Part No.	Description			Remark
*	A-4369-279-A	REAR AMPLIFIER BOARD, COMPLETE (AEP)			
		**********			
*	A-4369-280-A	REAR AMPLIFIER BOARD, COMPLETE (UK)			
		**********			
*	A-4369-281-A	REAR AMPLIFIER BOARD, COMPLETE			
		**********			
		(EXCEPT AEP, UK)			
		< CAPACITOR >			
C701	1-124-925-11	ELECT	2.2uF	20%	100V
C702	1-162-286-31	CERAMIC	220PF	10%	50V
C703	1-162-282-31	CERAMIC	100PF	10%	50V
C704	1-124-907-11	ELECT	10uF	20%	50V
C705	1-124-907-11	ELECT	10uF	20%	50V
C706	1-124-122-11	ELECT	100uF	20%	50V
C707	1-124-916-11	ELECT	22uF	20%	63V
C710	1-164-159-11	CERAMIC	0.1uF		50V
C711	1-164-159-11	CERAMIC	0.1uF		50V
C731	1-161-379-00	CERAMIC	0.01uF	20%	25V
C732	1-161-379-00	CERAMIC	0.01uF	20%	25V
C741	1-124-477-11	ELECT	47uF	20%	25V
C751	1-124-925-11	ELECT	2.2uF	20%	100V
C752	1-162-286-31	CERAMIC	220PF	10%	50V
C753	1-162-282-31	CERAMIC	100PF	10%	50V
C754	1-124-907-11	ELECT	10uF	20%	50V
C755	1-124-907-11	ELECT	10uF	20%	50V
C760	1-164-159-11	CERAMIC	0.1uF		50V
C761	1-164-159-11	CERAMIC	0.1uF		50V
		< CONNECTOR >			
* CN703	1-569-499-11	PIN, CONNECTOR 3P			
CN704	1-569-490-11	SOCKET, CONNECTOR 3P			
		< IC >			
IC701	8-749-920-19	IC STK4122MK2			
		< TRANSISTOR >			
Q701	8-729-119-76	TRANSISTOR 2SA1175-HFE			
Q702	8-729-620-05	TRANSISTOR 2SC2603-EF			
Q751	8-729-119-76	TRANSISTOR 2SA1175-HFE			
		< RESISTOR >			
R701	1-249-417-11	CARBON	1K	5%	1/4W F
R702	1-249-438-11	CARBON	56K	5%	1/4W
R703	1-249-416-11	CARBON	820	5%	1/4W F
R704	1-249-438-11	CARBON	56K	5%	1/4W
R705	1-249-425-11	CARBON	4.7K	5%	1/4W F
R706	1-249-425-11	CARBON	4.7K	5%	1/4W F
R707	1-249-425-11	CARBON	4.7K	5%	1/4W F
R708	1-249-425-11	CARBON	4.7K	5%	1/4W F
⚠R709	1-212-881-11	FUSIBLE	100	5%	1/4W F
⚠R710	1-217-151-00	RES, METAL PLATE			0.22
R711	1-249-441-11	CARBON	100K	5%	1/4W
R712	1-249-441-11	CARBON	100K	5%	1/4W
R713	1-249-441-11	CARBON	100K	5%	1/4W
R714	1-249-429-11	CARBON	10K	5%	1/4W
R718	1-249-397-11	CARBON	22	5%	1/4W F
R719	1-249-397-11	CARBON	22	5%	1/4W F
R741	1-249-425-11	CARBON	4.7K	5%	1/4W F
R751	1-249-417-11	CARBON	1K	5%	1/4W F
R752	1-249-438-11	CARBON	56K	5%	1/4W
R753	1-249-416-11	CARBON	820	5%	1/4W F
R754	1-249-438-11	CARBON	56K	5%	1/4W
R755	1-249-425-11	CARBON	4.7K	5%	1/4W F
R756	1-249-425-11	CARBON	4.7K	5%	1/4W F
R757	1-249-425-11	CARBON	4.7K	5%	1/4W F
R758	1-249-425-11	CARBON	4.7K	5%	1/4W F
⚠R759	1-212-881-11	FUSIBLE	100	5%	1/4W F
R760	1-217-151-00	RES, METAL PLATE			0.22
R761	1-249-441-11	CARBON	100K	5%	1/4W
R762	1-249-441-11	CARBON	100K	5%	1/4W
R763	1-249-441-11	CARBON	100K	5%	1/4W
R768	1-249-397-11	CARBON	22	5%	1/4W F
R769	1-249-397-11	CARBON	22	5%	1/4W F
**********					
*	A-4369-271-A	MAIN BOARD, COMPLETE (AEP)			
		**********			
*	A-4369-272-A	MAIN BOARD, COMPLETE (UK)			
		**********			
*	A-4369-273-A	MAIN BOARD, COMPLETE (EXCEPT AEP, UK)			
		**********			
		< CAPACITOR >			
C101	1-124-907-11	ELECT	10uF	20%	50V
C102	1-124-907-11	ELECT	10uF	20%	50V
C151	1-124-907-11	ELECT	10uF	20%	50V
C152	1-124-907-11	ELECT	10uF	20%	50V
C601	1-126-176-11	ELECT	220uF	20%	10V
C602	1-126-176-11	ELECT	220uF	20%	10V
C603	1-124-925-11	ELECT	2.2uF	20%	100V
C604	1-124-443-00	ELECT	100uF	20%	10V
C606	1-126-972-11	ELECT	1000uF	20%	50V
C607	1-124-912-11	ELECT	330uF	20%	50V
C621	1-124-907-11	ELECT	10uF	20%	50V

The components identified by mark ⚠ or dotted line with mark. ⚠ are critical for safety. Replace only with part number specified.

MAIN

Ref. No.	Part No.	Description				Remark
C622	1-124-907-11	ELECT	10uF	20%	50V	
C901	1-126-138-11	ELECT	4700uF	20%	50V	
C902	1-126-138-11	ELECT	4700uF	20%	50V	
C903	1-136-165-00	FILM	0.1uF	5%	50V	
C904	1-136-165-00	FILM	0.1uF	5%	50V	
C911	1-124-557-11	ELECT	1000uF	20%	25V	
C912	1-124-557-11	ELECT	1000uF	20%	25V	
C913	1-136-153-00	FILM	0.01uF	5%	50V	
C914	1-136-153-00	FILM	0.01uF	5%	50V	
C915	1-124-907-11	ELECT	10uF	20%	50V	
C916	1-124-907-11	ELECT	10uF	20%	50V	
C917	1-126-935-11	ELECT	470uF	20%	16V	
C918	1-126-935-11	ELECT	470uF	20%	16V	
C951	1-126-768-11	ELECT	2200uF	20%	16V	
C952	1-124-463-00	ELECT	0.1uF	20%	50V	
C953	1-162-294-31	CERAMIC	0.001uF	10%	50V	
C954	1-124-443-00	ELECT	100uF	20%	10V	
		< CONNECTOR >				
* CN101	1-568-836-11	SOCKET, CONNECTOR 17P				
CN102	1-564-505-11	PLUG, CONNECTOR 2P				
* CN103	1-568-839-11	SOCKET, CONNECTOR 23P				
CN105	1-564-511-11	PLUG, CONNECTOR 8P				
* CN106	1-564-509-11	PLUG, CONNECTOR 6P				
CN107	1-564-511-11	PLUG, CONNECTOR 8P				
		< DIODE >				
D601	8-719-987-63	DIODE	1N4148M			
D602	8-719-987-63	DIODE	1N4148M			
D603	8-719-987-63	DIODE	1N4148M			
D604	8-719-987-63	DIODE	1N4148M			
D605	8-719-987-63	DIODE	1N4148M			
D606	8-719-987-63	DIODE	1N4148M			
D621	8-719-987-63	DIODE	1N4148M			
D622	8-719-987-63	DIODE	1N4148M			
D623	8-719-001-91	DIODE	UZL-15M			
D624	8-719-987-63	DIODE	1N4148M			
D625	8-719-987-63	DIODE	1N4148M			
D626	8-719-987-63	DIODE	1N4148M			
D627	8-719-200-82	DIODE	11ES2			
D901	8-719-510-68	DIODE	D5SBA20F01			
D902	8-719-987-63	DIODE	1N4148M			
D903	8-719-987-63	DIODE	1N4148M			
D911	8-719-200-02	DIODE	10E2			
D912	8-719-200-02	DIODE	10E2			
D913	8-719-200-02	DIODE	10E2			
D914	8-719-200-02	DIODE	10E2			
D951	8-719-200-02	DIODE	10E2			
D952	8-719-200-02	DIODE	10E2			
		< IC >				
IC101	8-759-634-50	IC	M5218AL			
IC601	8-759-111-68	IC	uPC1237HA			
IC621	8-759-103-93	IC	uPC393C			
IC911	8-759-094-64	IC	TA7812S			
IC912	8-759-094-59	IC	TA79012S			
IC951	8-759-820-13	IC	L78MR06			
		< TRANSISTOR >				
Q601	8-729-900-63	TRANSISTOR	DTA124ES			
Q602	8-729-620-05	TRANSISTOR	2SC2603-EF			
Q603	8-729-620-05	TRANSISTOR	2SC2603-EF			
Q621	8-729-118-01	TRANSISTOR	2SB1116-K			
Q622	8-729-118-01	TRANSISTOR	2SB1116-K			
Q961	8-729-620-05	TRANSISTOR	2SC2603-EF			
		< RESISTOR >				
R101	1-249-429-11	CARBON	10K	5%	1/4W	
R102	1-249-429-11	CARBON	10K	5%	1/4W	
R103	1-249-429-11	CARBON	10K	5%	1/4W	
R104	1-249-429-11	CARBON	10K	5%	1/4W	
R105	1-247-807-31	CARBON	100	5%	1/4W	
R151	1-249-429-11	CARBON	10K	5%	1/4W	
R152	1-249-429-11	CARBON	10K	5%	1/4W	
R153	1-249-429-11	CARBON	10K	5%	1/4W	
R154	1-249-429-11	CARBON	10K	5%	1/4W	
R155	1-247-807-31	CARBON	100	5%	1/4W	
R601	1-249-429-11	CARBON	10K	5%	1/4W	
R602	1-249-441-11	CARBON	100K	5%	1/4W	
R603	1-249-430-11	CARBON	12K	5%	1/4W	
R604	1-249-437-11	CARBON	47K	5%	1/4W	
R605	1-249-438-11	CARBON	56K	5%	1/4W	
R606	1-249-437-11	CARBON	47K	5%	1/4W	
R607	1-215-891-11	METAL OXIDE	680	5%	2W	F
R608	1-215-891-11	METAL OXIDE	680	5%	2W	F
R609	1-215-891-11	METAL OXIDE	680	5%	2W	F
R610	1-249-429-11	CARBON	10K	5%	1/4W	
R611	1-249-429-11	CARBON	10K	5%	1/4W	
R612	1-249-429-11	CARBON	10K	5%	1/4W	
R613	1-249-429-11	CARBON	10K	5%	1/4W	
R614	1-249-429-11	CARBON	10K	5%	1/4W	
R615	1-249-409-11	CARBON	220	5%	1/4W	F
R616	1-249-409-11	CARBON	220	5%	1/4W	F
R617	1-249-409-11	CARBON	220	5%	1/4W	F
R618	1-249-409-11	CARBON	220	5%	1/4W	F
R621	1-249-435-11	CARBON	33K	5%	1/4W	
R622	1-249-435-11	CARBON	33K	5%	1/4W	

Ref. No.	Part No.	Description				Remark
R623	1-249-441-11	CARBON	100K	5%	1/4W	
R624	1-249-441-11	CARBON	100K	5%	1/4W	
R625	1-249-437-11	CARBON	47K	5%	1/4W	
R626	1-249-429-11	CARBON	10K	5%	1/4W	
R627	1-249-417-11	CARBON	1K	5%	1/4W	F
R628	1-247-807-31	CARBON	100	5%	1/4W	
R629	1-249-425-11	CARBON	4.7K	5%	1/4W	F
R630	1-249-425-11	CARBON	4.7K	5%	1/4W	F
R631	1-249-441-11	CARBON	100K	5%	1/4W	
R632	1-249-429-11	CARBON	10K	5%	1/4W	
R633	1-249-441-11	CARBON	100K	5%	1/4W	
R641	1-249-418-11	CARBON	1.2K	5%	1/4W	F
R642	1-249-418-11	CARBON	1.2K	5%	1/4W	F
R643	1-249-418-11	CARBON	1.2K	5%	1/4W	F
R644	1-249-418-11	CARBON	1.2K	5%	1/4W	F
R901	1-249-429-11	CARBON	10K	5%	1/4W	
R902	1-249-429-11	CARBON	10K	5%	1/4W	
⚠R911	1-219-134-11	FUSIBLE	0.1	10%	1/4W	
⚠R912	1-219-134-11	FUSIBLE	0.1	10%	1/4W	
⚠R951	1-212-934-00	FUSIBLE	1	5%	1/2W	F
⚠R952	1-212-934-00	FUSIBLE	1	5%	1/2W	F
R961	1-249-417-11	CARBON	1K	5%	1/4W	F
		< RELAY >				
RY601	1-515-920-11	RELAY (24V)				
RY602	1-515-920-11	RELAY (24V)				
RY603	1-515-360-21	RELAY				
**********						
*	A-4369-274-A	PANEL BOARD, COMPLETE (EXCEPT UK)				
		**********				
*	A-4369-275-A	PANEL BOARD, COMPLETE (UK)				
		**********				
		< CAPACITOR >				
C202	1-162-282-31	CERAMIC	100PF	10%	50V	
C203	1-126-301-11	ELECT	1uF	20%	50V	
C204	1-126-096-11	ELECT	10uF	20%	35V	
C211	1-124-465-00	ELECT	0.47uF	20%	50V	
C212	1-124-464-11	ELECT	0.22uF	20%	50V	
C213	1-126-157-11	ELECT	10uF	20%	16V	
C231	1-162-294-31	CERAMIC	0.001uF	10%	50V	
C232	1-164-159-11	CERAMIC	0.1uF		50V	
C233	1-162-282-31	CERAMIC	100PF	10%	50V	
C234	1-162-286-31	CERAMIC	220PF	10%	50V	
C235	1-164-159-11	CERAMIC	0.1uF		50V	
C236	1-164-159-11	CERAMIC	0.1uF		50V	
C237	1-162-282-31	CERAMIC	100PF	10%	50V	
C238	1-162-286-31	CERAMIC	220PF	10%	50V	

Ref. No.	Part No.	Description				Remark
C239	1-124-464-11	ELECT	0.22uF	20%	50V	
C240	1-126-157-11	ELECT	10uF	20%	16V	
C241	1-126-157-11	ELECT	10uF	20%	16V	
C252	1-162-282-31	CERAMIC	100PF	10%	50V	
C253	1-126-301-11	ELECT	1uF	20%	50V	
C261	1-124-465-00	ELECT	0.47uF	20%	50V	
C262	1-124-464-11	ELECT	0.22uF	20%	50V	
C263	1-126-157-11	ELECT	10uF	20%	16V	
C501	1-126-157-11	ELECT	10uF	20%	16V	
C502	1-161-379-00	CERAMIC	0.01uF	20%	25V	
C503	1-161-379-00	CERAMIC	0.01uF	20%	25V	
C521	1-161-379-00	CERAMIC	0.01uF	20%	25V	
C522	1-161-379-00	CERAMIC	0.01uF	20%	25V	
C551	1-124-443-00	ELECT	100uF	20%	10V	
C552	1-161-379-00	CERAMIC	0.01uF	20%	25V	
		< CONNECTOR >				
* CN201	1-568-839-11	SOCKET, CONNECTOR 23P				
* CN202	1-564-338-00	PIN, CONNECTOR 4P				
* CN203	1-564-337-00	PIN, CONNECTOR 3P				
		< DIODE >				
D201	8-719-987-63	DIODE	1N4148M			
D501	8-719-200-82	DIODE	11ES2			
D502	8-719-987-63	DIODE	1N4148M			
D503	8-719-987-63	DIODE	1N4148M			
D505	8-719-987-63	DIODE	1N4148M			
D511	8-719-046-70	DIODE	SEL5620C			
D512	8-719-046-70	DIODE	SEL5620C			
D513	8-719-046-70	DIODE	SEL5620C			
D514	8-719-046-70	DIODE	SEL5620C			
D515	8-719-045-89	DIODE	SML16760CN			
D516	8-719-045-89	DIODE	SML16760CN			
D517	8-719-032-83	DIODE	SEL5220S-TP			
D518	8-719-032-83	DIODE	SEL5220S-TP			
D551	8-719-200-82	DIODE	11ES2			
D741	8-719-002-09	DIODE	UZL-18M			
		< PLATE GROUND >				
* E101	4-942-204-01	PLATE, GROUND				
		< IC >				
IC201	8-759-634-50	IC	M5218AL			
IC231	8-759-634-50	IC	M5218AL			
IC501	8-759-192-72	IC	MC68HC05P9-SC405679B			
IC502	8-759-917-43	IC	SN74HC138AN			
IC503	8-749-923-43	IC	GP1U57XB			
IC551	8-759-184-40	IC	LB1638			

The components identified by mark ⚠ or dotted line with mark. ⚠ are critical for safety. Replace only with part number specified.

PANEL

Ref. No.	Part No.	Description				Remark
		< JACK >				
J201	1-764-106-11	JACK (MIX MIC)				
J202	1-764-106-11	JACK (HEADPHONES)				
		< TRANSISTOR >				
Q201	8-729-141-30	TRANSISTOR	2SC3623A-LK			
Q202	8-729-141-30	TRANSISTOR	2SC3623A-LK			
Q203	8-729-900-69	TRANSISTOR	DTA144WS			
Q211	8-729-620-05	TRANSISTOR	2SC2603-EF			
Q221	8-729-141-30	TRANSISTOR	2SC3623A-LK			
Q251	8-729-141-30	TRANSISTOR	2SC3623A-LK			
Q252	8-729-141-30	TRANSISTOR	2SC3623A-LK			
Q261	8-729-620-05	TRANSISTOR	2SC2603-EF			
Q271	8-729-141-30	TRANSISTOR	2SC3623A-LK			
Q501	8-729-620-05	TRANSISTOR	2SC2603-EF			
Q502	8-729-900-63	TRANSISTOR	DTA124ES			
Q503	8-729-900-36	TRANSISTOR	DTC124ES			
Q504	8-729-900-36	TRANSISTOR	DTC124ES			
Q505	8-729-900-63	TRANSISTOR	DTA124ES			
Q506	8-729-900-63	TRANSISTOR	DTA124ES			
Q512	8-729-900-36	TRANSISTOR	DTC124ES			
Q514	8-729-900-36	TRANSISTOR	DTC124ES			
		< RESISTOR >				
R201	1-249-429-11	CARBON	10K	5%	1/4W	
R202	1-249-417-11	CARBON	1K	5%	1/4W	F
R203	1-249-429-11	CARBON	10K	5%	1/4W	
R204	1-249-441-11	CARBON	100K	5%	1/4W	
R205	1-249-431-11	CARBON	15K	5%	1/4W	
R206	1-249-417-11	CARBON	1K	5%	1/4W	F
R207	1-249-429-11	CARBON	10K	5%	1/4W	
R208	1-249-429-11	CARBON	10K	5%	1/4W	
R209	1-247-807-31	CARBON	100	5%	1/4W	
R211	1-249-418-11	CARBON	1.2K	5%	1/4W	F
R212	1-249-435-11	CARBON	33K	5%	1/4W	
R213	1-247-895-00	CARBON	470K	5%	1/4W	
R214	1-249-429-11	CARBON	10K	5%	1/4W	
R215	1-249-417-11	CARBON	1K	5%	1/4W	F
R221	1-249-419-11	CARBON	1.5K	5%	1/4W	F
R222	1-249-413-11	CARBON	470	5%	1/4W	F
R223	1-249-429-11	CARBON	10K	5%	1/4W	
R231	1-249-441-11	CARBON	100K	5%	1/4W	
R232	1-249-417-11	CARBON	1K	5%	1/4W	F
R233	1-249-431-11	CARBON	15K	5%	1/4W	
R234	1-249-441-11	CARBON	100K	5%	1/4W	
R235	1-249-417-11	CARBON	1K	5%	1/4W	F
R236	1-249-434-11	CARBON	27K	5%	1/4W	
R237	1-249-441-11	CARBON	100K	5%	1/4W	
R238	1-249-441-11	CARBON	100K	5%	1/4W	
R239	1-249-417-11	CARBON	1K	5%	1/4W	F
R240	1-249-409-11	CARBON	220	5%	1/4W	F
R241	1-249-409-11	CARBON	220	5%	1/4W	F
R251	1-249-429-11	CARBON	10K	5%	1/4W	
R252	1-249-417-11	CARBON	1K	5%	1/4W	F
R253	1-249-429-11	CARBON	10K	5%	1/4W	
R254	1-249-441-11	CARBON	100K	5%	1/4W	
R255	1-249-431-11	CARBON	15K	5%	1/4W	
R256	1-249-417-11	CARBON	1K	5%	1/4W	F
R257	1-249-429-11	CARBON	10K	5%	1/4W	
R258	1-249-441-11	CARBON	100K	5%	1/4W	
R259	1-249-441-11	CARBON	100K	5%	1/4W	
R261	1-249-418-11	CARBON	1.2K	5%	1/4W	F
R262	1-249-435-11	CARBON	33K	5%	1/4W	
R263	1-247-895-00	CARBON	470K	5%	1/4W	
R264	1-249-429-11	CARBON	10K	5%	1/4W	
R265	1-249-417-11	CARBON	1K	5%	1/4W	F
R271	1-249-419-11	CARBON	1.5K	5%	1/4W	F
R272	1-249-413-11	CARBON	470	5%	1/4W	F
R273	1-249-429-11	CARBON	10K	5%	1/4W	
R501	1-247-903-00	CARBON	1M	5%	1/4W	
R502	1-249-429-11	CARBON	10K	5%	1/4W	
R503	1-249-429-11	CARBON	10K	5%	1/4W	
R504	1-249-417-11	CARBON	1K	5%	1/4W	F
R505	1-249-429-11	CARBON	10K	5%	1/4W	
R506	1-249-429-11	CARBON	10K	5%	1/4W	
R507	1-249-417-11	CARBON	1K	5%	1/4W	F
R508	1-249-417-11	CARBON	1K	5%	1/4W	F
R509	1-249-417-11	CARBON	1K	5%	1/4W	F
R510	1-249-417-11	CARBON	1K	5%	1/4W	F
R511	1-249-417-11	CARBON	1K	5%	1/4W	F
R512	1-249-417-11	CARBON	1K	5%	1/4W	F
R513	1-249-417-11	CARBON	1K	5%	1/4W	F
R514	1-249-417-11	CARBON	1K	5%	1/4W	F
R515	1-247-811-31	CARBON	150	5%	1/4W	
R516	1-249-417-11	CARBON	1K	5%	1/4W	F
R517	1-247-811-31	CARBON	150	5%	1/4W	
R518	1-249-429-11	CARBON	10K	5%	1/4W	
R520	1-249-422-11	CARBON	2.7K	5%	1/4W	F
R521	1-249-393-11	CARBON	10	5%	1/4W	F
R522	1-249-418-11	CARBON	1.2K	5%	1/4W	F
R523	1-249-420-11	CARBON	1.8K	5%	1/4W	F
R524	1-249-422-11	CARBON	2.7K	5%	1/4W	F
R525	1-249-423-11	CARBON	3.3K	5%	1/4W	F
R526	1-249-431-11	CARBON	15K	5%	1/4W	
R527	1-249-429-11	CARBON	10K	5%	1/4W	
R528	1-249-429-11	CARBON	10K	5%	1/4W	

PANEL **SPEAKER** **TRANSFORMER (A)** **TRANSFORMER (C)**

Ref. No.	Part No.	Description				Remark
R530	1-249-409-11	CARBON	220	5%	1/4W	F
R531	1-249-412-11	CARBON	390	5%	1/4W	F
R533	1-249-412-11	CARBON	390	5%	1/4W	F
R534	1-247-811-31	CARBON	150	5%	1/4W	
R536	1-247-811-31	CARBON	150	5%	1/4W	
R537	1-249-429-11	CARBON	10K	5%	1/4W	
R539	1-249-429-11	CARBON	10K	5%	1/4W	
		< VARIABLE RESISTOR >				
RV201	1-223-520-11	RES, VAR, CARBON 10K/100KX4 (VOLUME)				
RV211	1-223-336-11	RES, VAR, CARBON 50K/50K (DYNAMIC BASS SYSTEM:LEVEL)				
RV212	1-223-201-11	RES, VAR, CARBON 100K/100K (DYNAMIC BASS SYSTEM:FREQUENCY)				
RV231	1-241-813-11	RES, VAR, CARBON 50K (MIC LEVEL)				
		< SWITCH >				
S501	1-572-184-11	SWITCH, KEYBOARD (SYSTEM POWER)				
S502	1-572-184-11	SWITCH, KEYBOARD (MUTING)				
S503	1-572-184-11	SWITCH, KEYBOARD (PHONO)				
S504	1-572-184-11	SWITCH, KEYBOARD (TUNER)				
S505	1-572-184-11	SWITCH, KEYBOARD (CD)				
S506	1-572-184-11	SWITCH, KEYBOARD (TAPE)				
S507	1-572-184-11	SWITCH, KEYBOARD (MD/DAT/VIDEO 2)				
S508	1-572-184-11	SWITCH, KEYBOARD (VIDEO 1)				
		< VIBRATOR >				
X501	1-577-358-21	VIBRATOR, CERAMIC (4MHz)				
**********						
*	1-649-733-11	SPEAKER BOARD **********				
		< CONNECTOR >				
* CN401	1-564-523-11	PLUG, CONNECTOR 8P				
		< JACK >				
J401	1-568-572-11	JACK, PIN 2P (REAR SPEAKERS)				
J402	1-580-893-11	JACK, PIN 2P (CENTER SPEAKERS)				
		< TERMINAL >				
TB401	1-537-445-11	TERMINAL BOARD (SP) (FRONT SPEAKER)				
**********						
*	1-649-735-11	TRANSFORMER (A) BOARD **********				
**********						

Ref. No.	Part No.	Description	Remark
*	1-651-466-11	TRANSFORMER (C) BOARD **********	
**********			
		MISCELLANEOUS **********	
11	1-751-718-11	WIRE (FLAT TYPE) (23 CORE)	
13	1-751-216-31	LEAD (WITH CONNECTOR) (2 CORE)	
66	1-751-717-11	WIRE (FLAT TYPE) (17 CORE)	
⚠CNJ901	1-526-794-11	OUTLET, AC	
M601	1-698-209-11	MOTOR, DC FAN	
**********			
		ACCESSORIES & PACKING MATERIALS **********	
	3-703-845-01	LABEL, CAUTION, NEW UL (UK)	
*	4-962-377-01	CUSHION (A) (FRONT) (EXCEPT UK)	
*	4-962-378-01	CUSHION (A) (REAR) (EXCEPT UK)	
**********			
		********** HARDWARE LIST **********	
#1	7-682-547-09	SCREW +BVTT 3X6 (S)	
#2	7-685-647-79	SCREW +BVTP 3X10 TYPE2 N-S	
#3	7-682-548-04	SCREW +BVTT 3X8 (S)	
#4	7-685-650-79	SCREW +BVTP 3X16 TYPE2 IT-3	

The components identified by mark ⚠ or dotted line with mark. ⚠ are critical for safety. Replace only with part number specified.

English
94E0575-1
Printed in Japan
© 1994. 5

9-959-586-11

Sony Corporation
Consumer A&V Products Company
Home A&V Products Div.

Published by Home A&V Products Div.
Quality Engineering Dept.

SEQ-H5900

SERVICE MANUAL

AEP Model
UK Model
E Model
Australian Model
Tourist Model

SEQ-H5900 is the digital control amplifier in the hifi component system MHC-5900/E90X.

SPECIFICATIONS

Audio inputs
  VIDEO 1 (phono jacks):
  MD/DAT/VIDEO 2 (phono jacks):
    sensitivity 250 mV,
    impedance 47 kilohms
  PHONO (phono jack):
    Sensitivity 5 mV,
    impedance 47 kilohms
Video inputs
  VIDEO 1 (phono jacks):
  MD/DAT/VIDEO 2 (phono jacks):
    1 Vp-p/75 ohms unbalanced,
    sync negative
Audio outputs
  VIDEO 1 (phono jacks):
  MD/DAT/VIDEO 2 (phono jacks):
    voltage 260 mV
    impedance 2 kilohms
Video outputs
  VIDEO 1 (phono jacks):
  MD/DAT/VIDEO 2 (phono jacks):
  MONITOR OUT (phono jacks):
    1 Vp-p/75ohms unbalanced,
    sync negative
Dimensions
  Approx. 225 x 80 x 235 mm (w/h/d)
  (8 7/8 x 3 1/4 x 9 3/8 inches)
Mass Approx. 3.1 kg
  (6 lb 14 oz)

General

Destination	Power requirements	Power consumption
UK	240 V AC, 50 Hz	45 W
AEP	220 – 230V AC, 50/60 Hz	45 W
EXCEPT AEP, UK	110 – 120 V or 220 – 240 V AC adjustable, 50/60 Hz	45 W

Design and specifications subject to change without notice.

DIGITAL CONTROL AMPLIFIER

SONY®

MODEL IDENTIFICATION

– Printed on the back panel –

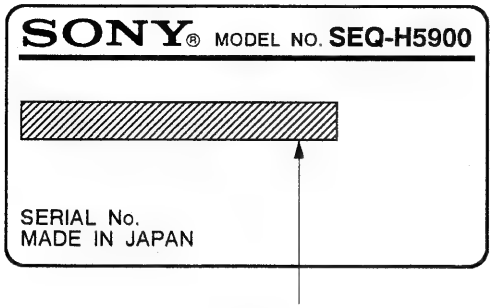

AEP model : AC : 220 – 230 V ~50/60 Hz 45 W
UK model : AC : 240 V ~50 Hz
EXCEPT AEP, UK model: AC : 110 – 120/220 – 240 V ~ 50/60 Hz 45 W

SAFETY-RELATED COMPONENT WARNING!!

COMPONENTS IDENTIFIED BY MARK ⚠ OR DOTTED LINE WITH MARK ⚠ ON THE SCHEMATIC DIAGRAMS AND IN THE PARTS LIST ARE CRITICAL TO SAFE OPERATION. REPLACE THESE COMPONENTS WITH SONY PARTS WHOSE PART NUMBERS APPEAR AS SHOWN IN THIS MANUAL OR IN SUPPLEMENTS PUBLISHED BY SONY.

TABLE OF CONTENTS

Section	*Title*	*Page*
	Specifications	1
	Model Identification	2
	Servicing note	2
1.	**GENERAL**	
	Index to Parts and Controls	3
	Sound Quality Adjustment	3
2.	**DIAGRAMS**	
2-1.	Block Diagram	4
2-2.	Main Section Printed Wiring Boards	9
2-3.	Main Section Schematic Diagram	13
2-4.	DSP Section Schemati Diagram	20
2-5.	DSP Section Printed Wiring Board	23
2-6.	IC Pin Function Description	25
3.	**EXPLODED VIEW**	30
4.	**ELECTRICAL PARTS LIST**	31

Flexible Circuit Board Repairing

- Keep the temperature of the soldering iron around 270℃ during repairing.
- Do not touch the soldering iron on the same conductor of the circuit board (within 3 times).
- Be careful not to apply force on the conductor when soldering or unsoldering.

Notes on chip component replacement

- Never reuse a disconnected chip component.
- Notice that the minus side of a tantalum capacitor may be damaged by heat.

It is impossible to measure the voltage value partially because the main and DSP boards are installed so close. When the voltage check is heeded, use the extension cable jigs (J-8000-027-A) instead of five PC board (plug) connectors (8p).

Index to Parts and Controls

Refer to the pages indicated in parentheses for details on how to use the controls. Controls with an asterisk have indicators on themselves.

Front Panel

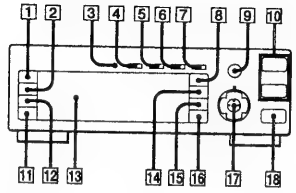

1 KARAOKE PON button (26)
2 DPE (Digital Parametric Equalizer) button (21)
3 CLOCK SET button (6)
4 ONCE button* (24)
5 DAILY button* (24)
6 REC button* (25)
7 SLEEP button* (24)
8 TIMER SET button (24, 25)
9 DOLBY PRO LOGIC button* (23)
10 MENU 1, 2 buttons (21)
11 CANCEL button (22, 25)
12 DPS (Digital Presence Surround) button (22)
13 Display window (6, 21, 24)
14 P.FILE button (22)
15 DISPLAY button (21)

Display Window

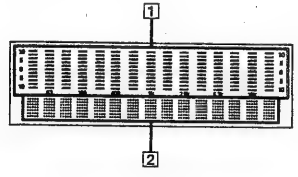

1 Graphic equalizer indication (21)
2 Audio emphasis indication (21)

Sound Quality Adjustment

What is DSP?
"DSP" stands for "Digital Signal Processor". This converts the (analog) music signal into a digital signal to generate the various audio effects.
Because all signals are digitally processed, it is possible to create a high-quality sound field with little degradation of quality. The DSP in this unit is equipped with the following two functions:

Digital Parametric Equalizer (DPE) function
Adjusts the sound quality by adjusting the levels at various frequencies.

Digital Presence Surround (DPS) function
Adjusts the sound field by adjusting the reverberation time and reverberation level.

Ten types of adjusted sounds (the Digital Sound Menu) representing various combinations of these two functions are already stored in the digital control amplifier. You can check the differences created by these different audio effects by calling up those that interest you and trying them. It is also possible to start with one of these digital sound menu selections, adjust the sound as you want, and then store the new adjusted sound in the memory. This allows you to control how your music sounds, whether you want to emphasize high frequencies, limit the expansiveness of the music, or play back very soft sounds with clarity. This system also uses the DSP to implement the functions of the Dolby Pro Logic Surround Decoder.

What Is the Surround Effect?
This special effect creates a feeling of actually being at a concert hall or theatre by adding the reverberation of sounds reflecting off of the walls of a hall to the sound component travelling directly from the instrument, etc., to the listener.

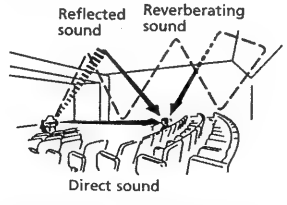

This unit also permits adjustment of the reverberation time and the reverberation level.

Adjusting the reverberation time
By adjusting the time it takes the reverberating and reflected sound to reach the listener's ears and the time it takes for the reverberations to disappear, it is possible to set the size of the hall or theatre according to the sound image.
Making the reverberation time shorter gives a feeling of listening to a performance in a small, cozy club.
Making the reverberation time longer gives a feeling of listening to a performance in a large concert hall.

Adjusting the reverberation level
By adjusting the intensity of the reverberating sound and the reflected sound, it is possible to set the intensity of reverberation in the hall or theatre.
Increase the level to impart the music with the feeling of a performance in a "live" hall with much reverberation.
Decrease the level to impart the music with the feeling of a performance in a "dead" hall with little reverberation.

Example of Surround Speaker Arrangement
It is best if the surround speakers (the rear speakers) are at the same level as the listener's ears or higher.

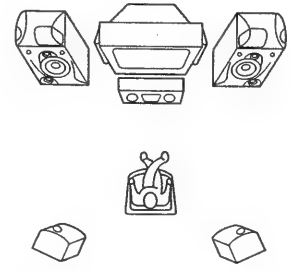

What is Dolby Pro Logic Surround?
Dolby Pro Logic Surround is a new standard from Dolby Laboratories Licensing Corporation, that was developed by improving the sound imaging capability of conventional Dolby Surround. Thanks to Dolby Laboratories Licensing Corporation's unique directionality emphasis circuitry, sound imaging has been greatly improved, as can be seen in the figure below.
Dolby Surround is basically a home theatre audio system. Dolby Pro Logic Surround is playback technology that uses professional decoder technology to recreate the sound field from a two-channel Dolby Surround signal as it was intended by the creators of the movie. Therefore, no special entertainment software created especially for use with Dolby Pro Logic Surround is required; Dolby Pro Logic Surround works with conventional Dolby Surround movie and music software.

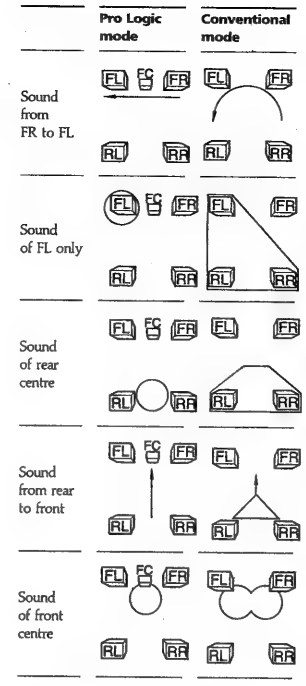

FL (Front Left) FR (Front Right)
FC (Front Centre) RL (Rear Left)
RR (Rear Right)

The Dolby Pro Logic Surround Modes
Select one of the four modes, depending on the arrangement of the speakers.

NORMAL Mode
Select this mode when using the supplied speakers or a small centre speaker. Because a small speaker cannot adequately reproduce low-frequency sounds, the bass for the centre channel is output from the front speakers.

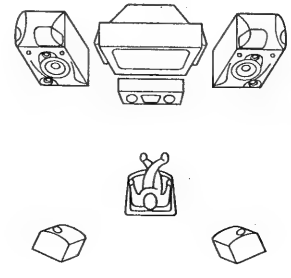

WIDE Mode
Select this mode when using a medium- or large-sized speaker similar to the left and right speakers for the centre speaker.

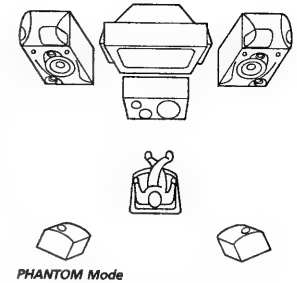

PHANTOM Mode
Select this mode when you are not using a centre speaker. The sound for the centre channel is output from the left and right front speakers.

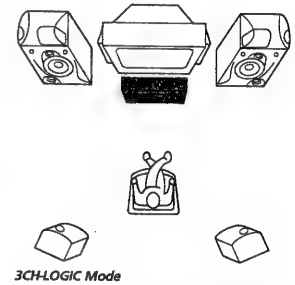

3CH-LOGIC Mode
Select this mode when using only the front and centre speakers. The sound for the rear channels is output from the left and right front speakers.

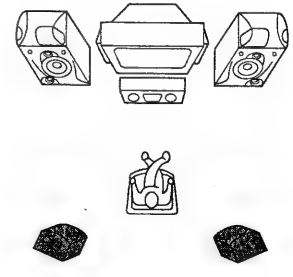

SECTION 2
DIAGRAMS

2-1. BLOCK DIAGRAM

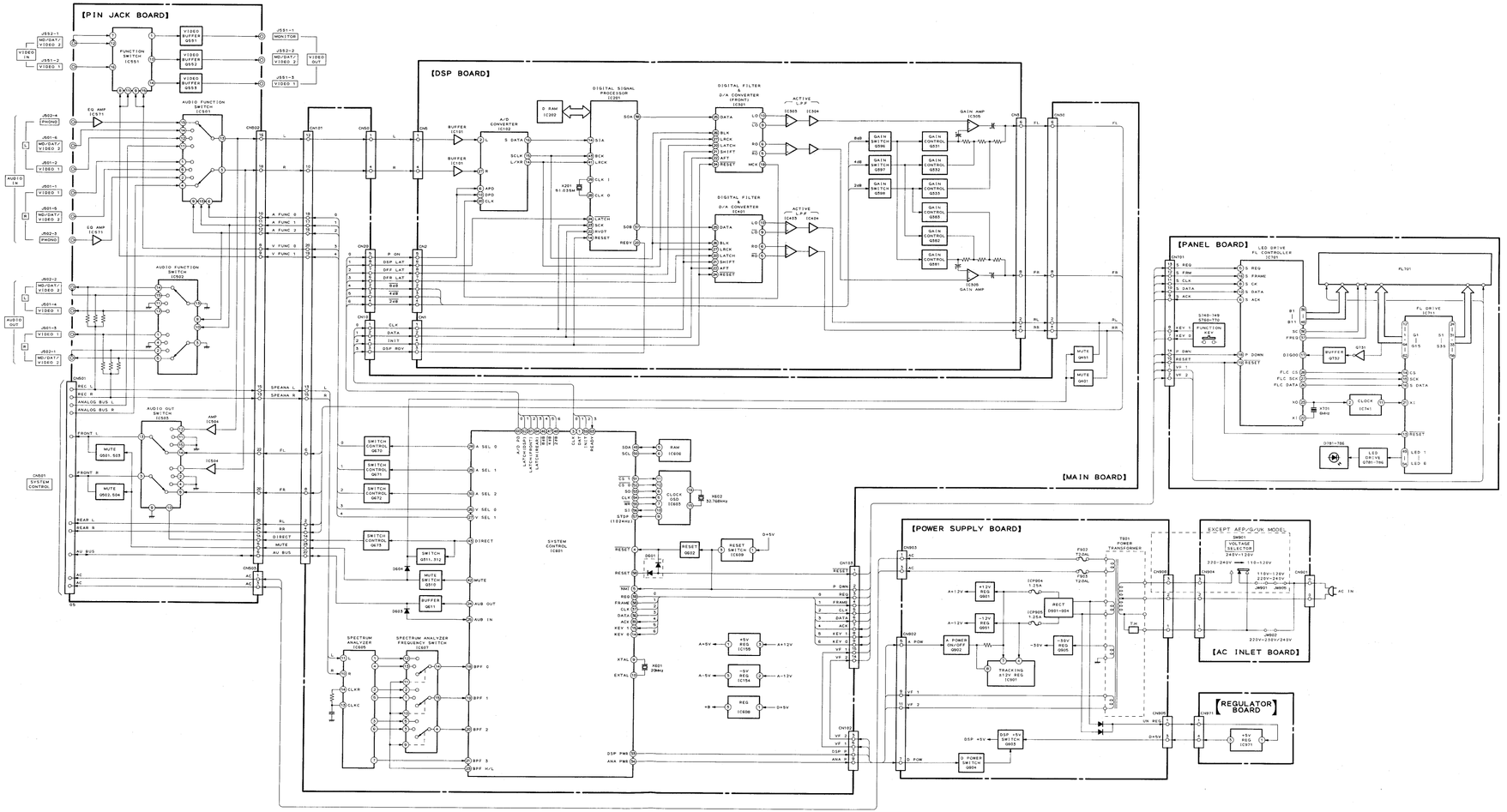

• Circuit Boards Location

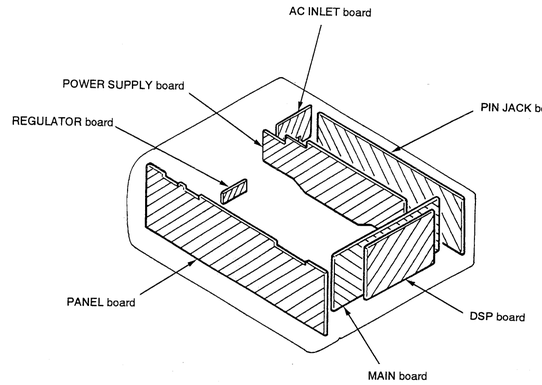

SEQ-H5900

2-2. MAIN SECTION PRINTED WIRING BOARDS • See page 7 for Circuit Boards Location.

• Semiconductor Lead Layouts

CXD2705AQ

HD6433298A10F
M38122M2-062FP

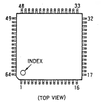

M5230L-A

M5278L05-TP

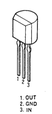

NJM79L05A

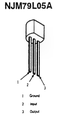

PST600D-T
PST600K-T

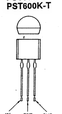

TA7805S

2SA1235-F
2SA1344
2SC1623-L5L6
2SC3396
2SC3398
2SD601A-S

2SB1094-LK

2SB1116

DCA010

UZP-30B-TP
UZP-5.1B

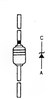

1SS226

10E2

SEL2210S-CD

SEL5220S-TP
SEL5420S-TP

SEL5820A-TH8C

• Semiconductor Location

Ref. No.	Location	Ref. No.	Location
D601	C-2	IC711	G-8
D602	C-2	IC741	G-6
D603	B-5	IC901	G-12
D604	A-7	IC971	F-19
D608	B-2		
D781	F-3	Q310	B-4
D782	F-2	Q311	A-3
D783	E-6	Q312	B-3
D784	E-5	Q401	C-7
D785	E-5	Q451	C-6
D786	E-4	Q501	B-14
D901	F-13	Q502	B-14
D902	F-13	Q503	B-14
D903	F-12	Q504	B-14
D904	F-13	Q551	C-9
D905	F-13	Q552	C-9
D906	F-13	Q553	B-9
D907	G-16	Q602	C-2
D908	G-18	Q611	A-6
D909	G-16	Q670	A-5
		Q671	A-6
IC154	B-7	Q672	B-5
IC155	B-7	Q673	A-3
IC501	C-13	Q731	G-7
IC502	C-13	Q732	G-6
IC503	B-13	Q781	F-3
IC504	B-14	Q782	F-2
IC551	B-12	Q783	E-6
IC571	C-14	Q784	E-5
IC601	B-3	Q785	E-4
IC603	B-2	Q786	F-4
IC605	B-5	Q901	F-11
IC606	B-2	Q902	F-12
IC607	B-6	Q903	F-13
IC608	B-2	Q904	E-13
IC609	C-2	Q905	G-17
IC701	G-5	Q951	F-11

Note:

- ●—○—● : parts extracted from the component side.
- ● ■ ● : parts mounted on the conductor side.
- ● ● : Through hole.
- ▨ : Pattern of the rear side.
- ▨ : Pattern from the side which enables seeing.

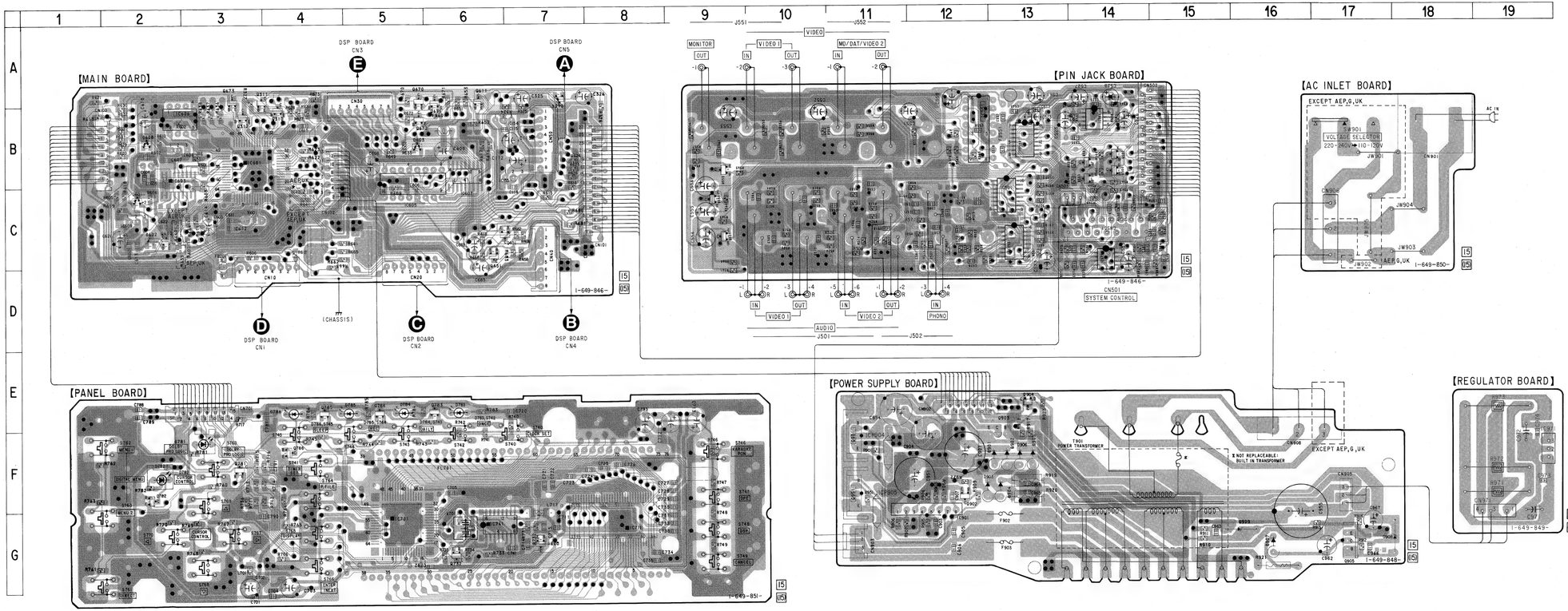

2-3. MAIN SECTION SCHEMATIC DIAGRAM • See page 18 for IC Block Diagrams.

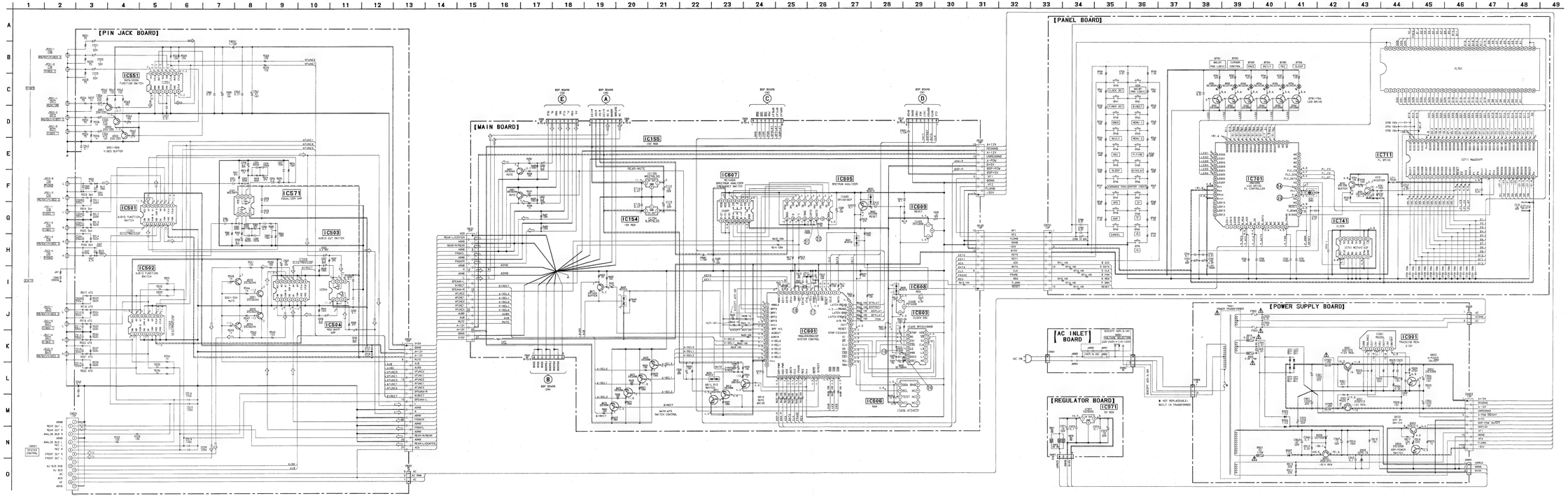

Note:

- All capacitors are in μF unless otherwise noted. pF: μμF 50 WV or less are not indicated except for electrolytics and tantalums.
- All resistors are in Ω and ¼ W or less unless otherwise specified.
- △ : internal component.
- ⌐⌐⌐ : fusible resistor.

Note: The components identified by mark ⚠ or dotted line with mark ⚠ are critical for safety. Replace only with part number specified.

- ▬▬ : B + Line.
- ▬▬ : B − Line.
- ▭ : panel designation.
- Voltages and waveforms are dc with respect to ground under no-signal (detuned) conditions.
- Voltages are taken with a VOM (10 MΩ/V). Voltage variations may be noted due to normal production tolerances.
- Waveforms are taken with a oscilloscope. Voltage variations may be noted due to normal production tolerances.
- Circled numbers refer to waveforms.
- Signal path.
  ⇨ : AUDIO
  ⇨ : VIDEO

• IC Block Diagrams

IC102 AK5369

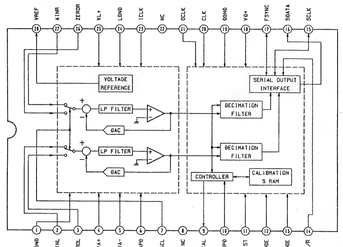

IC603 SPC5243MOB

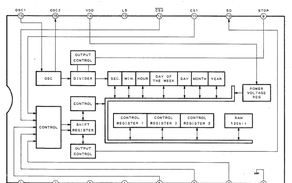

IC901 M5230L-A

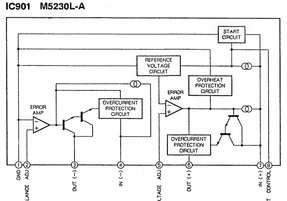

• Waveforms

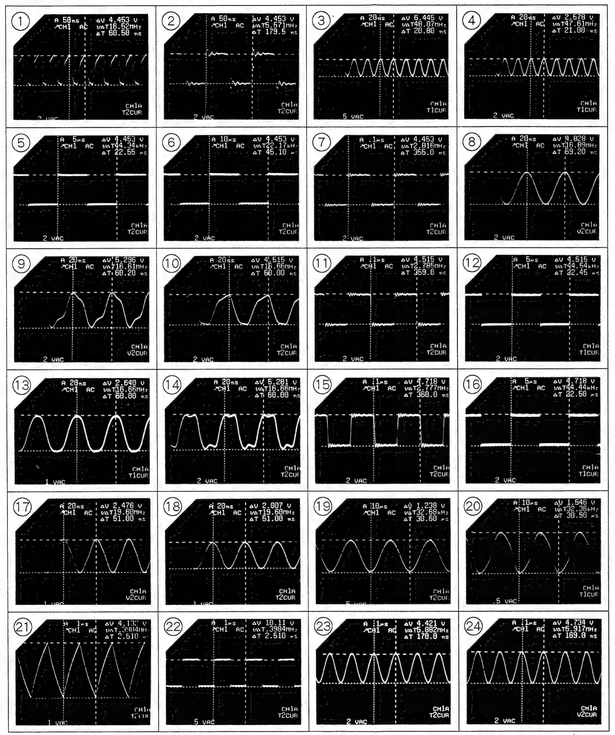

Note:

- All capacitors are in μF unless otherwise noted. pF: μμF 50 WV or less are not indicated except for electrolytics and tantalums.
- All resistors are in Ω and ¼ W or less unless otherwise specified.
- ⟶ : B + Line.
- ⟶ : B − Line.
- Voltages and waveforms are dc with respect to ground under no-signal (detuned) conditions.
- Voltages are taken with a VOM (10 MΩ/V). Voltage variations may be noted due to normal production tolerances.
- Waveforms are taken with a oscilloscope. Voltage variations may be noted due to normal production tolerances.
- Circled numbers refer to waveforms.
- Signal path. ⇨ : AUDIO

2-4. DSP SECTION SCHEMATIC DIAGRAM

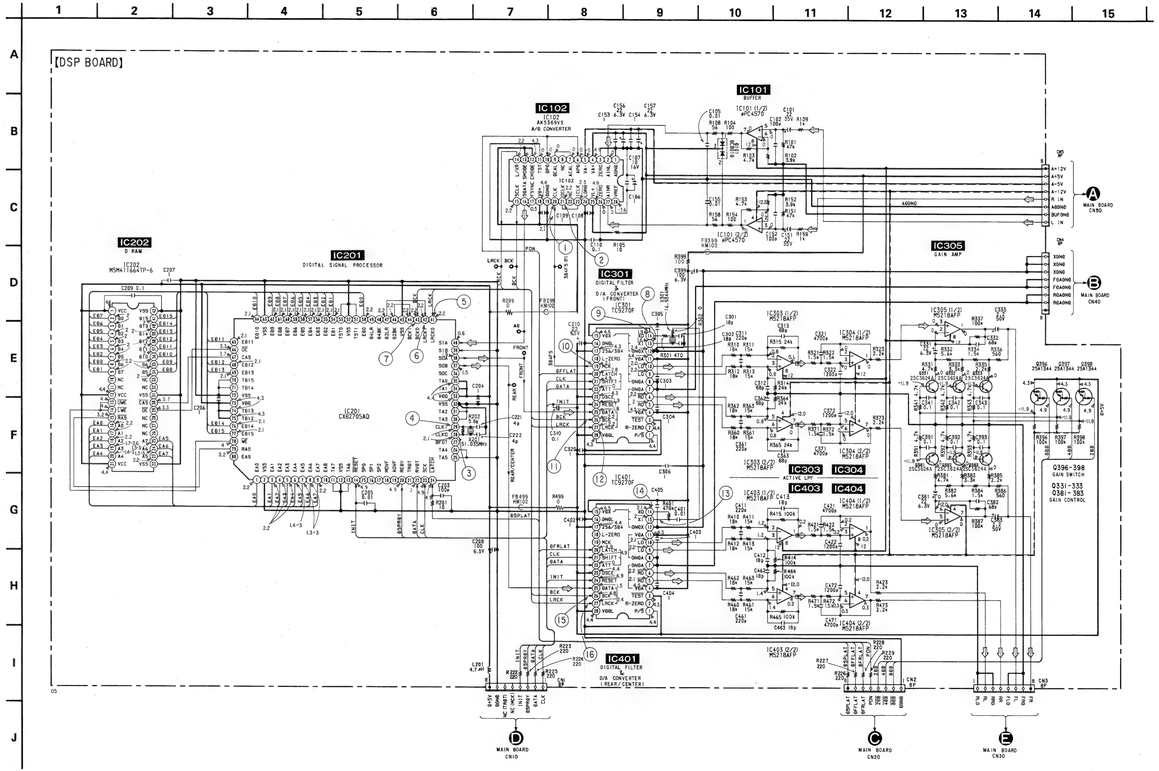

2-5. DSP SECTION PRINTED WIRING BOARD

• See page 7 for Circuit Boards Location, page 8 for Semiconduction Lead Layouts.

【DSP BOARD】(SIDE A)

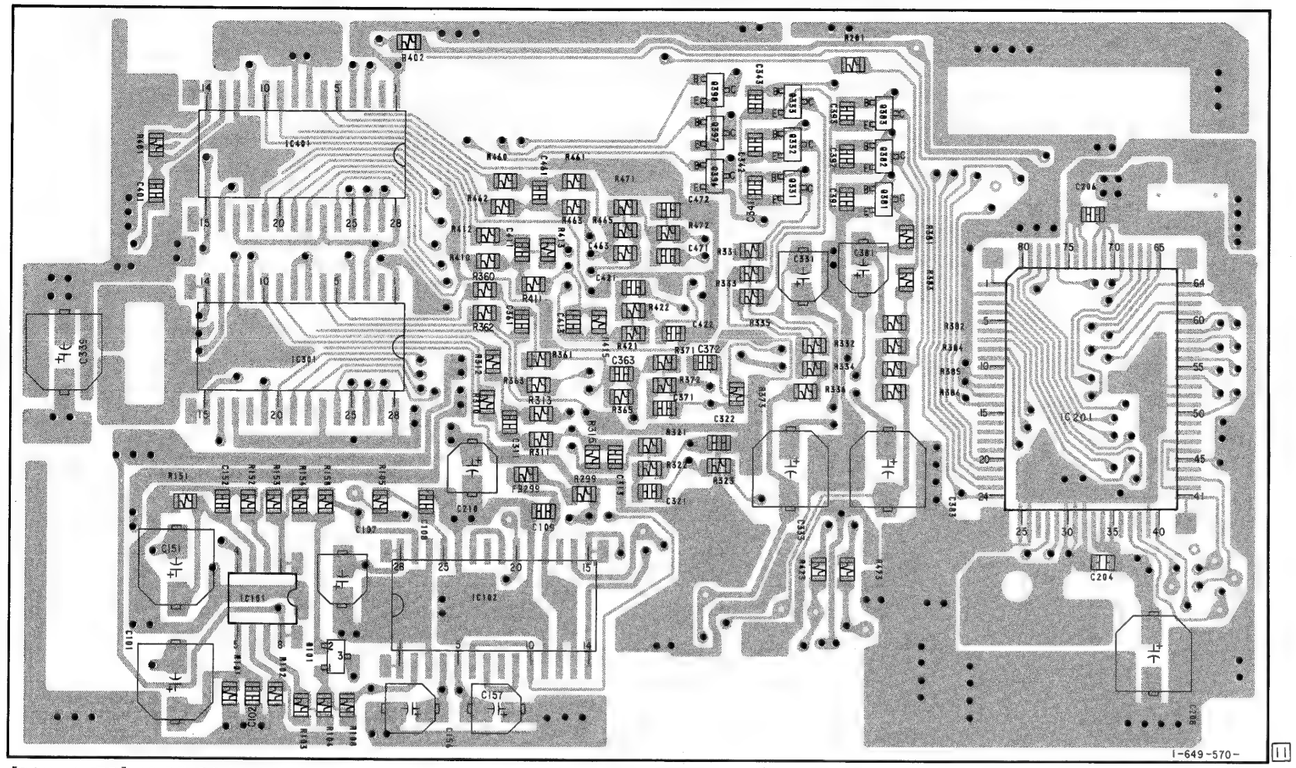

【DSP BOARD】(SIDE B)

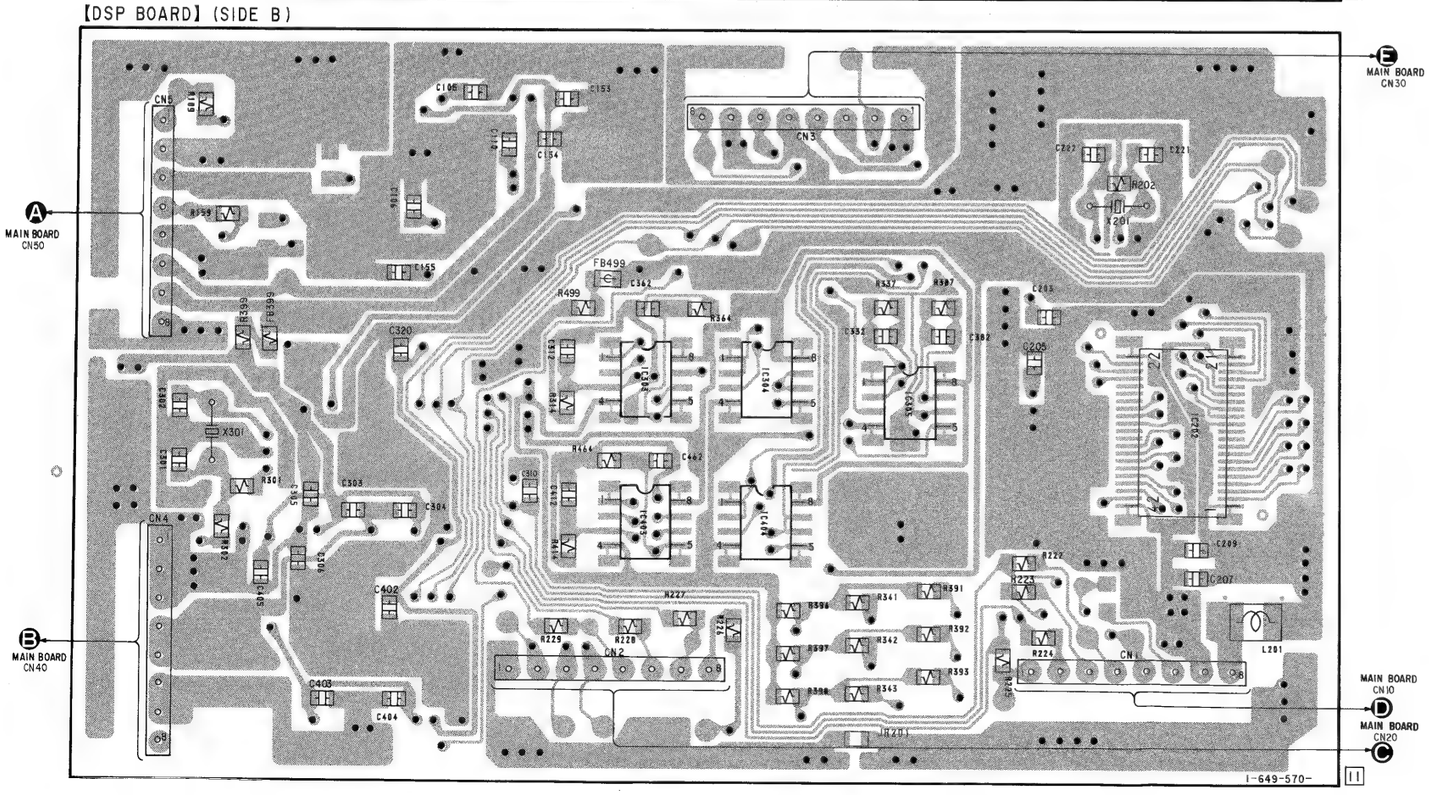

• **Semiconductor Location**

Ref. No.	Location
D101	E-3
IC101	E-3
IC102	E-5
IC201	C-9
IC202	I-9
IC301	C-3
IC303	I-5
IC304	I-6
IC305	I-7
IC401	B-3
IC403	J-5
IC404	J-6
Q331	B-7
Q332	B-7
Q333	A-7
Q381	B-7
Q382	B-7
Q383	B-7
Q396	B-6
Q397	B-6
Q398	A-6

Note:

- ○——— : parts extracted from the component side.
- ● : Through hole.
- ▒▒▒ : Pattern from the side which enables seeing.

(The other layers' patterns are not indicated.)

Caution:	
Pattern face side: (Side B)	Parts on the pattern face side seen from the pattern face are indicated.
Parts face side: (Side A)	Parts on the parts face side seen from the parts face are indicated.

2-6. IC PIN FUNCTION DESCRIPTION

IC601 HD6433298F (Main Micro Computer)

Pin No.	Pin Name	I/O	Description
1	DATA	O	IC201 CXD2705A (DSP), IC301, 401, TC9270F (DAC) Data
2	NC	—	Not used.
3	SCLK	O	IC201 CXD2705A (DSP), IC301, 401, TC9270F (DAC) Data shift clock
4	$\overline{\text{RESET}}$	I	System reset.
5	$\overline{\text{NMI}}$	I	POWER DOWN detection input.
6	Vcc	—	Power supply. (+5V)
7	$\overline{\text{STBY}}$	I	Stand by. (fixed in H)
8	Vss	—	GND
9	XTAL	I	Oscillation (20MHz)
10	EXTAL	I	Oscillation (20MHz)
11	MD1	I	Actuating mode. (fixed in L)
12	MD0	I	Actuating mode. (fixed in L)
13	AVss	—	GND
14	KEY0	I	KEY analog input.
15	KEY1	I	KEY analog input.
16	MODEL1	I	Designed for: L Japan
17	MODEL2	I	
18	BPF0	I	BPF analog input.
19	BPF1	I	BPF analog input.
20	BPF2	I	BPF analog input.
21	BPF3	I	BPF analog input.
22	AVcc	—	Power supply. (+5V)
23	BPF H/L	O	Spectrum analyzer band switching output.
24	AUBOUT	O	AU BUS output.
25	AUBIN	I	AU BUS input.
26	V-SEL0	O	Picture input switching output.
27	V-SEL1	O	Picture input switching output.
28	V-SEL0	O	Voice input switching output.
29	A-SEL1	O	Voice input switching output.
30	A-SEL2	O	Voice input switching output.
31	Vcc	—	Power supply. (+5V)
32	NC	—	Not used.
33	DSP-PWR	O	DSP Power supply ON/OFF output.
34	ANA-PWR	O	Analog power supply ON/OFF output.
35	ACK	I	IC701 M38122M2 (indication micro computer) Acknowledge
36	DATA	O	IC701 M38122M2 (indication micro computer) Data
37	CLK	O	IC701 M38122M2 (indication micro computer) Data shift clock
38	FRAME	O	IC701 M38122M2 (indication micro computer) Data frame
39	REQ	O	IC710 M38122M2 (indication micro computer) Request
40	Vss	—	GND

Pin No.	Pin Name	I/O	Description
41	NC	—	Not used.
42	$\overline{\text{MUTE}}$	O	Muting output.
43	DIRECT	O	Source direct switching output.
44	NC	—	Not used.
45	NC	—	Not used.
46	$\overline{\text{8DB}}$	O	Gain amp. control.
47	$\overline{\text{4DB}}$	O	Gain amp. control.
48	$\overline{\text{2DB}}$	O	Gain amp. control.
49	SDA	I/O	IC606 AT24C01 (E2PROM) Data
50	SCL	O	IC606 AT24C01 (E2PROM) Data shift clock
51	$\overline{\text{CS1}}$	O	IC603 SPC5243 (clock IC) Chip select 1.
52	$\overline{\text{CS0}}$	O	IC603 SPC5243 (clock IC) Chip select 0.
53	SQ	O	IC603 SPC5243 (clock IC) Write data
54	CLK	O	IC603 SPC5243 (clock IC) Data shift clock
55	$\overline{\text{WR}}$	O	IC603 SPC5243 (clock IC) Write/Read switch
56	S1	I	IC603 SPC5243 (clock IC) Read data
57	STDP	I	IC603 SPC5243 (clock IC) 1024Hz input
58	RESET	O	IC701 M38122M2 (indication micro computer) Reset
59	INT	O	IC201 CXD2705A (DSP), IC301, 401 TC9270 (DAC) Reset
60	A/D PD	O	IC102 CS5369 (ADC) Reset
61	LATCH (FRONT)	O	IC301 TC9270 (DAC) Data latch clock
62	LATCHI (DSP)	O	IC201 CXD2705A (DSP) Data latch clock
63	READY	I	IC201 CXD2705A (DSP) Ready
64	LATCH (REAR)	O	IC401 TC9270 (DAC) Data latch clock

IC701 M38122M2 (Indication Micro computer)

Pin No.	Pin Name	I/O	Description
1 – 4	LED11 – 08	O	Not used.
5	S REQ	I	IC601 HD6433298 (main micro computer) Request
6	S ACK	O	IC601 HD6433298 (main micro computer) Acknowledge
7	NC	—	Not used.
8	S CK	I	IC601 HD6433298 (main micro computer) Data shift clock
9	NC	—	Not used.
10	S DATA	I	IC601 HD6433298 (main micro computer) Data
11 – 15	NC	—	Not used.
16	S FRAME	I	IC601 HD6433298 (main micro computer) Data frame
17	DIG00	I	Indication timing input.
18	P DOWN	I	POWER DOWN detection input.
19	$\overline{\text{RESET}}$	I	System reset.
20, 21	NC	—	Not used.
22	XIN	I	Oscillation (6MHz)
23	XOUT	I	Oscillation (6MHz)
24	Vss	—	GND
25	NC	—	Not used.
26	FLC DATA	O	IC711 M66004 (FL tube driver) Data
27	FLC SCK	O	IC711 M66004 (FL tube driver) Data shift clock
28	FLC CS	O	IC711 M66004 (FL tube driver) Chip select
29 – 35	NC	—	Not used.
36 – 48	SEG47 – 35	O	FL tube segment output.
49 – 54	LED00 – 05	O	LED output.
55, 56	LED06 – 07	O	Not used.
57	Vcc	—	Power supply. (+5V)
58	Vee	—	Power supply. (– 30V)
59	AVss	—	GND
60	VREF	—	Power supply. (+5V)
61 – 64	LED15 – 12	O	Not used.

- **IC201 Digital Signal Processor (CXD2705AQ)**

D-RAM with 1 Mbit (IC202, M5M411664TP) is equipped with Digital Signal Processor (DSP) that is capable of 2ch which has the functions such as Equalizer, Dynamics and Revive with 1 chip. The D-RAM operates sound fields shown below with digital signal.

- •D.P.E.(Digital Parametric Equalizer)
- •D.D.S.(Digital Dynamic Sound) compressor effect
- •D.P.S.(Digital Presense Surround) surround effect
- •Karaoke pon
- •AI condition
- •AI LPC
- •Rear component generation

Pin No.	Pin Name	I/O	Description
1	EAO	O	M5M411664 (D-RAM) address.
2	Vss	—	GND terminal.
3	EA1	O	M5M411664 (D-RAM) address.
4	EA2	O	
5	EA3	O	
6	EA4	O	
7	EA5	O	
8	EA6	O	
9	EA7	O	
10	EA8	O	D-RAM address. Not used. (open)
11	TA7	I	Test terminal. Connected to GND.
12	Vss	—	GND terminal.
13	TA6	I	Test terminal. Connected to GND.
14	$\overline{\text{RESET}}$	I	Reset input. "L":Reset
15	SP0	O	Static port 0. Not used. (open)
16	SP1	O	Static port 1. Not used. (open)
17	SP2	O	Static port 2. Not used. (open)
18	MOVF	O	MAC overflow signal output. Not used.(open)
19	AOVF	O	ALU overflow signal output. Not used. (open)
20	REDY	O	Readiness signal output to HD6433388F. (master controller)
21	TRDT	O	Data output to HD6433388F. (master controller) Not used.
22	RVDT	I	Data input from HD6433388F. (master controller)
23	SCK	I	Shift clock input from HD6433388F. (master controller)
24	$\overline{\text{LATCH}}$	I	Mode section signal input from HD6433388F. (master controller)
25	TA5	I	Test terminal. Connected to GND.
26	TA4	I	
27	BFOT	O	Clock buffer output. Not used. (open)
28	CLKO	O	Clock output. (51.035MHz)
29	CLKI	I	Clock input. (51.035MHz)
30	TA3	I	Test terminal. Connected to GND.
31	TA2	I	
32	Vss	—	GND terminal.
33	V_{DD}	—	+5V power supply terminal.
34	TA1	I	Test terminal. Connected to +5V.
35	TA0	I	
36	SOC	O	Serial data output. Not used. (open)
37	SOB	O	Serial data output. (rear output)
38	SOA	O	Serial data output. (front output)
39	SIB	I	Serial data input. Connected to GND.
40	SIA	I	Serial data input.

Pin No.	Pin Name	I/O	Description
41	LRCK0	I	LR clock input.
42	LRCK1	I	
43	BCK0	I	Bit clock input.
44	BCK1	I	
45	Vss	—	GND terminal.
46	D2BK	O	2-dividing bit clock output.
47	D2LR	O	2-dividing LR clock output.
48	D4BK	O	4-dividing bit clock output. Not used. (open)
49	D4LR	O	4-dividing LR clock output. Not used. (open)
50	ED0	I/O	Data I/O with M5M411664. (D-RAM)
51	TST1	I	Test terminal. Connected to GND.
52	Vss	—	GND terminal.
53	TST0	I	Test terminal. Connected to GND.
54	ED1	I/O	Data I/O with M5M411664. (D-RAM)
55	ED2	I/O	
56	ED3	I/O	
57	ED4	I/O	
58	ED5	I/O	
59	ED6	I/O	
60	ED7	I/O	
61	ED8	I/O	
62	ED9	I/O	
63	Vss	—	GND terminal.
64	ED10	I/O	Data I/O with M5M411664. (D-RAM)
65	ED11	I/O	
66	$\overline{OE}$	O	M5M411664 (D-RAM) output enable output. Effective in "L".
67	CAS	O	M5M411664 (D-RAM) columm address strobe output.
68	ED12	I/O	Data I/O with M5M411664. (D-RAM)
69	ED13	I/O	
70	TD15	I	Test terminal. Connected with GND.
71	TD14	I	
72	Vss	—	GND terminal.
73	VDD	—	+5V power supply terminal
74	TD13	I	Test terminal. Connected to +5V.
75	TD12	I	
76	ED14	I/O	Data I/O with M5M411664. (D-RAM)
77	ED15	I/O	
78	$\overline{WE}$	O	M5M411664 (D-RAM) write enable output. Effective in "L".
79	RAS	O	M5M411664 (D-RAM) row address strobe output.
80	EA9	O	D-RAM address. Not used. (open)

SECTION 3
EXPLODED VIEW

NOTE:

- -XX and -X mean standardized parts, so they may have some difference from the original one.
- Color Indication of Appearance Parts
  Example:
  KNOB, BALANCE (WHITE) . . . (RED)
  ↑ ↑
  Parts Color Cabinet's Color
- Items marked "*" are not stocked since they are seldom required for routine service. Some delay should be anticipated when ordering these items.
- The mechanical parts with no reference number in the exploded views are not supplied.
- Hardware (# mark) list and accessories and packing materials are given in the last of the electrical parts list.

The components identified by mark ⚠ or dotted line with mark ⚠ are critical for safety.
Replace only with part number specified.

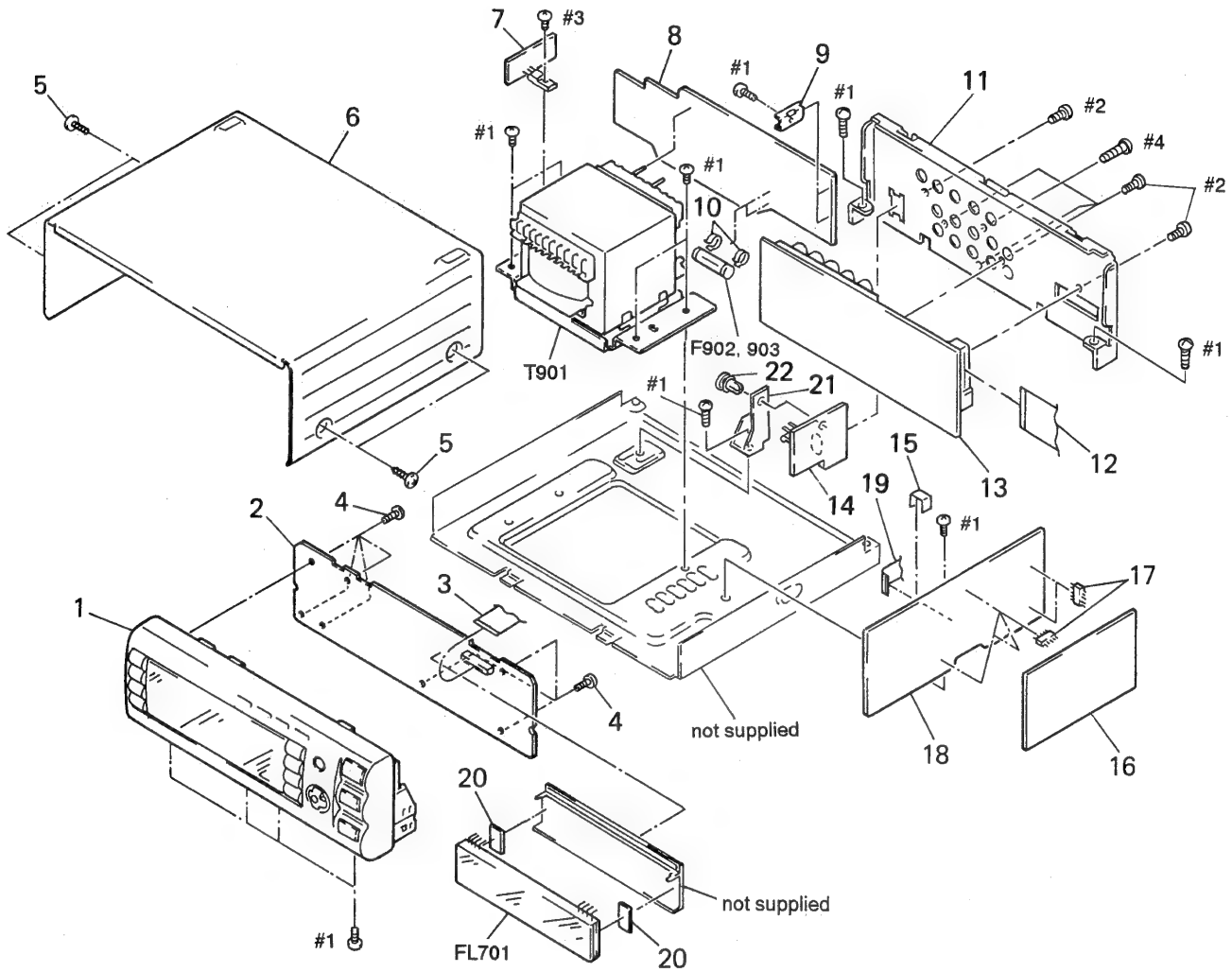

Ref. No.	Part No.	Description	Remark
1	X-4944-096-1	PANEL ASSY, FRONT	
* 2	A-4369-232-A	PANEL BOARD, COMPLETE (EXCEPT UK)	
* 2	A-4369-547-A	PANEL BOARD, COMPLETE (UK)	
3	1-690-094-11	WIRE, FLAT TYPE (15 CORE)	
4	4-951-620-01	SCREW (2.6X8), +BVTP	
5	3-363-099-21	SCREW (CASE 3 TP2)	
6	4-961-481-61	CASE	
* 7	1-649-849-15	GERULATOR BOARD	
* 8	A-4369-540-A	POWER SUPPLY BOARD, COMPLETE (EXCEPT AEP, UK)	
* 8	A-4369-544-A	POWER SUPPLY BOARD, COMPLETE (UK)	
* 8	A-4369-550-A	POWER SUPPLY BOARD, COMPLETE (AEP)	
* 9	3-309-144-21	HEAT SINK	
* 10	1-533-213-31	HOLDER, FUSE	
* 11	4-961-922-11	PANEL, BACK (AE1)	
* 11	4-961-922-21	PANEL, BACK (AE2)	
* 11	4-961-922-31	PANEL, BACK (EXCEPT AEP, UK)	
* 11	4-961-922-41	PANEL, BACK (UK)	
12	1-751-614-11	WIRE (FLAT TYPE) (27 CORE)	
* 13	A-4369-543-A	PIN JACK BOARD, COMPLETE (UK)	

Ref. No.	Part No.	Description	Remark
* 13	A-4369-549-A	PIN JACK BOARD, COMPLETE (EXCEPT UK)	
* 14	A-4369-546-A	INLET BOARD, COMPLETE (UK)	
* 14	1-649-850-15	AC INLET BOARD (EXCEPT UK)	
15	4-860-518-00	CUSHION	
* 16	A-4365-579-A	DSP BOARD, COMPLETE	
* 17	1-695-810-11	CONNECTOR, PC BOARD (PLUG) 8P	
* 18	A-4369-539-A	MAIN BOARD, COMPLETE (EXCEPT AEP, UK)	
* 18	A-4369-542-A	MAIN BOARD, COMPLETE (UK)	
* 18	A-4369-548-A	MAIN BOARD, COMPLETE (AEP)	
19	1-590-036-11	WIRE, FLAT TYPE (13 CORE)	
* 20	4-932-810-11	CUSHION (FL)	
* 21	4-954-242-01	BRACKET (IN)	
22	4-812-134-11	RIVET NYLON, 3.5	
⚠F902	1-532-203-00	FUSE, TIME-LAG (2A 250V)	
⚠F903	1-532-203-00	FUSE, TIME-LAG (2A 250V)	
FL701	1-519-649-11	INDICATOR TUBE, FLUORESCENT	
⚠T901	1-426-696-11	TRANSFORMER, POWER (AE)	
⚠T901	1-426-697-11	TRANSFORMER, POWER (UK)	
⚠T901	1-426-698-11	TRANSFORMER, POWER (EXCEPT AEP, UK)	

SECTION 4
ELECTRICAL PARTS LIST

DSP

NOTE:
- Due to standardization, replacements in the parts list may be different from the parts specified in the diagrams or the components used on the set.
- -XX and -X mean standardized parts, so they may have some difference from the original one.
- RESISTORS
  All resistors are in ohms.
  METAL:Metal-film resistor.
  METAL OXIDE: Metal oxide-film resistor.
  F:nonflammable
- Items marked "*" are not stocked since they are seldom required for routine service. Some delay should be anticipated when ordering these items.
- SEMICONDUCTORS
  In each case, u:μ, for example:
  uA..: μA.. uPA..: μPA..
  uPB..: μPB.. uPC..: μPC.. uPD..: μPD..
- CAPACITORS
  uF: μF
- COILS
  uH: μH

The components identified by mark ⚠ or dotted line with mark. ⚠ are critical for safety. Replace only with part number specified.

When indicating parts by reference number, please include the board.

Ref. No.	Part No.	Description			Remark
*	A-4365-579-A	DSP BOARD, COMPLETE			
		**********			
		< CAPACITOR >			
C101	1-126-400-11	ELECT	22uF	20%	35V
C102	1-163-251-11	CERAMIC CHIP	100PF	5%	50V
C105	1-164-232-11	CERAMIC CHIP	0.01uF		50V
C106	1-164-346-11	CERAMIC CHIP	1uF		16V
C107	1-124-779-00	ELECT CHIP	10uF	20%	16V
C108	1-164-346-11	CERAMIC CHIP	1uF		16V
C109	1-164-346-11	CERAMIC CHIP	1uF		16V
C110	1-163-038-00	CERAMIC CHIP	0.1uF		25V
C151	1-126-400-11	ELECT	22uF	20%	35V
C152	1-163-251-11	CERAMIC CHIP	100PF	5%	50V
C153	1-164-346-11	CERAMIC CHIP	1uF		16V
C154	1-164-346-11	CERAMIC CHIP	1uF		16V
C155	1-164-232-11	CERAMIC CHIP	0.01uF		50V
C156	1-124-778-00	ELECT CHIP	22uF	20%	6.3V
C157	1-124-778-00	ELECT CHIP	22uF	20%	6.3V
C203	1-163-251-11	CERAMIC CHIP	100PF	5%	50V
C204	1-164-346-11	CERAMIC CHIP	1uF		16V
C205	1-164-232-11	CERAMIC CHIP	0.01uF		50V
C206	1-164-346-11	CERAMIC CHIP	1uF		16V
C207	1-164-346-11	CERAMIC CHIP	1uF		16V
C208	1-126-206-11	ELECT CHIP	100uF	20%	6.3V
C209	1-163-038-00	CERAMIC CHIP	0.1uF		25V
C210	1-124-778-00	ELECT CHIP	22uF	20%	6.3V
C221	1-163-087-00	CERAMIC CHIP	4PF		50V
C222	1-163-087-00	CERAMIC CHIP	4PF		50V
C301	1-163-099-00	CERAMIC CHIP	18PF	5%	50V
C302	1-163-099-00	CERAMIC CHIP	18PF	5%	50V
C303	1-164-346-11	CERAMIC CHIP	1uF		16V
C304	1-164-346-11	CERAMIC CHIP	1uF		16V
C305	1-164-346-11	CERAMIC CHIP	1uF		16V
C306	1-164-346-11	CERAMIC CHIP	1uF		16V
C310	1-163-038-00	CERAMIC CHIP	0.1uF		25V
C311	1-163-125-00	CERAMIC CHIP	220PF	5%	50V
C312	1-163-113-00	CERAMIC CHIP	68PF	5%	50V
C313	1-163-113-00	CERAMIC CHIP	68PF	5%	50V
C320	1-164-346-11	CERAMIC CHIP	1uF		16V
C321	1-163-017-00	CERAMIC CHIP	0.0047uF	5%	50V
C322	1-163-010-11	CERAMIC CHIP	0.0012uF	10%	50V
C331	1-124-778-00	ELECT CHIP	22uF	20%	6.3V
C332	1-163-113-00	CERAMIC CHIP	68PF	5%	50V
C333	1-126-601-11	ELECT CHIP	2.2uF	20%	50V
C341	1-163-038-00	CERAMIC CHIP	0.1uF		25V
C342	1-163-038-00	CERAMIC CHIP	0.1uF		25V
C343	1-163-038-00	CERAMIC CHIP	0.1uF		25V
C361	1-163-125-00	CERAMIC CHIP	220PF	5%	50V
C362	1-163-113-00	CERAMIC CHIP	68PF	5%	50V
C363	1-163-113-00	CERAMIC CHIP	68PF	5%	50V
C371	1-163-017-00	CERAMIC CHIP	0.0047uF	5%	50V
C372	1-163-010-11	CERAMIC CHIP	0.0012uF	10%	50V
C381	1-124-778-00	ELECT CHIP	22uF	20%	6.3V
C382	1-163-113-00	CERAMIC CHIP	68PF	5%	50V
C383	1-126-601-11	ELECT CHIP	2.2uF	20%	50V
C391	1-163-038-00	CERAMIC CHIP	0.1uF		25V
C392	1-163-038-00	CERAMIC CHIP	0.1uF		25V
C393	1-163-038-00	CERAMIC CHIP	0.1uF		25V
C399	1-126-206-11	ELECT CHIP	100uF	20%	6.3V
C401	1-164-232-11	CERAMIC CHIP	0.01uF		50V
C402	1-164-346-11	CERAMIC CHIP	1uF		16V
C403	1-164-346-11	CERAMIC CHIP	1uF		16V
C404	1-164-346-11	CERAMIC CHIP	1uF		16V
C405	1-164-346-11	CERAMIC CHIP	1uF		16V
C411	1-163-125-00	CERAMIC CHIP	220PF	5%	50V
C412	1-163-099-00	CERAMIC CHIP	18PF	5%	50V
C413	1-163-099-00	CERAMIC CHIP	18PF	5%	50V
C421	1-163-017-00	CERAMIC CHIP	0.0047uF	5%	50V
C422	1-163-010-11	CERAMIC CHIP	0.0012uF	10%	50V
C461	1-163-125-00	CERAMIC CHIP	220PF	5%	50V
C462	1-163-099-00	CERAMIC CHIP	18PF	5%	50V
C463	1-163-099-00	CERAMIC CHIP	18PF	5%	50V
C471	1-163-017-00	CERAMIC CHIP	0.0047uF	5%	50V
C472	1-163-010-11	CERAMIC CHIP	0.0012uF	10%	50V

DSP

Ref. No.	Part No.	Description	Remark
		< CONNECTOR >	
* CN1	1-695-808-11	CONNECTOR, PC BOARD 8P	
* CN2	1-695-808-11	CONNECTOR, PC BOARD 8P	
* CN3	1-695-808-11	CONNECTOR, PC BOARD 8P	
* CN4	1-695-808-11	CONNECTOR, PC BOARD 8P	
* CN5	1-695-808-11	CONNECTOR, PC BOARD 8P	
		< DIODE >	
D101	8-719-990-39	DIODE DCB010	
		< FERRITE BEAD >	
FB299	1-414-235-11	INDUCTOR, FERRITE BEAD	
FB399	1-414-235-11	INDUCTOR, FERRITE BEAD	
FB499	1-414-235-11	INDUCTOR, FERRITE BEAD	
		< IC >	
IC101	8-759-106-02	IC uPC4570G2	
IC102	8-759-191-21	IC AK5369VS-T1	
IC201	8-752-352-30	IC CXD2705AQ	
IC202	8-759-085-03	IC M5M411664TP-6	
IC301	8-759-188-07	IC TC9270F-ELP	
IC303	8-759-636-55	IC M5218AFP	
IC304	8-759-636-55	IC M5218AFP	
IC305	8-759-636-55	IC M5218AFP	
IC401	8-759-188-07	IC TC9270F-ELP	
IC403	8-759-636-55	IC M5218AFP	
IC404	8-759-636-55	IC M5218AFP	
		< COIL >	
L201	1-408-773-31	INDUCTOR CHIP 4.7uH	
		< TRANSISTOR >	
Q331	8-729-107-46	TRANSISTOR 2SC3624A-L15	
Q332	8-729-107-46	TRANSISTOR 2SC3624A-L15	
Q333	8-729-107-46	TRANSISTOR 2SC3624A-L15	
Q381	8-729-107-46	TRANSISTOR 2SC3624A-L15	
Q382	8-729-107-46	TRANSISTOR 2SC3624A-L15	
Q383	8-729-107-46	TRANSISTOR 2SC3624A-L15	
Q396	8-729-805-65	TRANSISTOR 2SA1344	
Q397	8-729-805-65	TRANSISTOR 2SA1344	
Q398	8-729-805-65	TRANSISTOR 2SA1344	
		< RESISTOR >	
R101	1-216-089-91	METAL GLAZE 47K 5%	1/10W
R102	1-216-063-00	METAL CHIP 3.9K 5%	1/10W
R103	1-216-065-00	METAL CHIP 4.7K 5%	1/10W
R104	1-216-025-00	METAL CHIP 100 5%	1/10W
R105	1-216-001-00	METAL CHIP 10 5%	1/10W
R108	1-216-019-00	METAL CHIP 56 5%	1/10W
R109	1-216-049-00	METAL CHIP 1K 5%	1/10W
R151	1-216-089-91	METAL GLAZE 47K 5%	1/10W
R152	1-216-063-00	METAL CHIP 3.9K 5%	1/10W
R153	1-216-065-00	METAL CHIP 4.7K 5%	1/10W
R154	1-216-025-00	METAL CHIP 100 5%	1/10W
R158	1-216-019-00	METAL CHIP 56 5%	1/10W
R159	1-216-049-00	METAL CHIP 1K 5%	1/10W
R201	1-216-001-00	METAL CHIP 10 5%	1/10W
R202	1-216-067-00	METAL CHIP 5.6K 5%	1/10W
R222	1-216-033-00	METAL CHIP 220 5%	1/10W
R223	1-216-033-00	METAL CHIP 220 5%	1/10W
R224	1-216-033-00	METAL CHIP 220 5%	1/10W
R225	1-216-033-00	METAL CHIP 220 5%	1/10W
R226	1-216-033-00	METAL CHIP 220 5%	1/10W
R227	1-216-033-00	METAL CHIP 220 5%	1/10W
R228	1-216-033-00	METAL CHIP 220 5%	1/10W
R229	1-216-033-00	METAL CHIP 220 5%	1/10W
R299	1-216-295-91	METAL GLAZE 0 5%	1/10W
R301	1-216-041-00	METAL CHIP 470 5%	1/10W
R302	1-216-295-91	METAL GLAZE 0 5%	1/10W
R310	1-216-079-00	METAL CHIP 18K 5%	1/10W
R311	1-216-077-00	METAL CHIP 15K 5%	1/10W
R312	1-216-079-00	METAL CHIP 18K 5%	1/10W
R313	1-216-077-00	METAL CHIP 15K 5%	1/10W
R314	1-216-082-00	METAL GLAZE 24K 5%	1/10W
R315	1-216-082-00	METAL GLAZE 24K 5%	1/10W
R321	1-216-053-00	METAL CHIP 1.5K 5%	1/10W
R322	1-216-053-00	METAL CHIP 1.5K 5%	1/10W
R323	1-216-057-00	METAL CHIP 2.2K 5%	1/10W
R331	1-216-065-00	METAL CHIP 4.7K 5%	1/10W
R332	1-216-067-00	METAL CHIP 5.6K 5%	1/10W
R333	1-216-061-00	METAL CHIP 3.3K 5%	1/10W
R334	1-216-053-00	METAL CHIP 1.5K 5%	1/10W
R335	1-216-057-00	METAL CHIP 2.2K 5%	1/10W
R336	1-216-043-00	METAL CHIP 560 5%	1/10W
R337	1-216-097-00	METAL CHIP 100K 5%	1/10W
R341	1-216-065-00	METAL CHIP 4.7K 5%	1/10W
R342	1-216-065-00	METAL CHIP 4.7K 5%	1/10W
R343	1-216-065-00	METAL CHIP 4.7K 5%	1/10W
R360	1-216-079-00	METAL CHIP 18K 5%	1/10W
R361	1-216-077-00	METAL CHIP 15K 5%	1/10W
R362	1-216-079-00	METAL CHIP 18K 5%	1/10W
R363	1-216-077-00	METAL CHIP 15K 5%	1/10W
R364	1-216-082-00	METAL GLAZE 24K 5%	1/10W
R365	1-216-082-00	METAL GLAZE 24K 5%	1/10W

Ref. No.	Part No.	Description			Remark
R371	1-216-053-00	METAL CHIP	1.5K	5%	1/10W
R372	1-216-053-00	METAL CHIP	1.5K	5%	1/10W
R373	1-216-057-00	METAL CHIP	2.2K	5%	1/10W
R381	1-216-065-00	METAL CHIP	4.7K	5%	1/10W
R382	1-216-067-00	METAL CHIP	5.6K	5%	1/10W
R383	1-216-061-00	METAL CHIP	3.3K	5%	1/10W
R384	1-216-053-00	METAL CHIP	1.5K	5%	1/10W
R385	1-216-057-00	METAL CHIP	2.2K	5%	1/10W
R386	1-216-043-00	METAL CHIP	560	5%	1/10W
R387	1-216-097-00	METAL CHIP	100K	5%	1/10W
R391	1-216-065-00	METAL CHIP	4.7K	5%	1/10W
R392	1-216-065-00	METAL CHIP	4.7K	5%	1/10W
R393	1-216-065-00	METAL CHIP	4.7K	5%	1/10W
R396	1-216-097-00	METAL CHIP	100K	5%	1/10W
R397	1-216-097-00	METAL CHIP	100K	5%	1/10W
R398	1-216-097-00	METAL CHIP	100K	5%	1/10W
R399	1-216-025-00	METAL CHIP	100	5%	1/10W
R401	1-216-113-00	METAL CHIP	470K	5%	1/10W
R410	1-216-079-00	METAL CHIP	18K	5%	1/10W
R411	1-216-077-00	METAL CHIP	15K	5%	1/10W
R412	1-216-079-00	METAL CHIP	18K	5%	1/10W
R413	1-216-077-00	METAL CHIP	15K	5%	1/10W
R414	1-216-097-00	METAL CHIP	100K	5%	1/10W
R415	1-216-097-00	METAL CHIP	100K	5%	1/10W
R421	1-216-053-00	METAL CHIP	1.5K	5%	1/10W
R422	1-216-053-00	METAL CHIP	1.5K	5%	1/10W
R423	1-216-057-00	METAL CHIP	2.2K	5%	1/10W
R460	1-216-079-00	METAL CHIP	18K	5%	1/10W
R461	1-216-077-00	METAL CHIP	15K	5%	1/10W
R462	1-216-079-00	METAL CHIP	18K	5%	1/10W
R463	1-216-077-00	METAL CHIP	15K	5%	1/10W
R464	1-216-097-00	METAL CHIP	100K	5%	1/10W
R465	1-216-097-00	METAL CHIP	100K	5%	1/10W
R471	1-216-053-00	METAL CHIP	1.5K	5%	1/10W
R472	1-216-053-00	METAL CHIP	1.5K	5%	1/10W
R473	1-216-057-00	METAL CHIP	2.2K	5%	1/10W
R499	1-216-295-91	METAL GLAZE	0	5%	1/10W

< VIBRATOR >

X201	1-760-134-21	VIBRATOR, CRYSTAL (51.035MHz)	
X301	1-579-280-11	VIBRATOR, CRYSTAL (16.9344MHz)	

****

Ref. No.	Part No.	Description	Remark
*	A-4369-546-A	INLET BOARD, COMPLETE (UK)	
		**********	
*	1-649-850-15	AC INLET BOARD (EXCEPT UK)	
		**********	
		< CONNECTOR >	
⚠CN901	1-526-931-11	INLET, AC (~ AC IN)	
CN906	1-564-321-00	PIN, CONNECTOR 2P (AE, UK)	
CN906	1-564-687-11	PIN, CONNECTOR 3P (EXCEPT AEP, UK)	

****

*	A-4369-539-A	MAIN BOARD, COMPLETE (EXCEPT AEP, UK)	
		**********	
*	A-4369-542-A	MAIN BOARD, COMPLETE (UK)	
		**********	
*	A-4369-548-A	MAIN BOARD, COMPLETE (AEP)	
		**********	
		< CAPACITOR >	

C112	1-126-059-11	ELECT	10uF	20% 50V
C113	1-126-059-11	ELECT	10uF	20% 50V
C114	1-164-005-11	CERAMIC CHIP	0.47uF	25V
C115	1-164-005-11	CERAMIC CHIP	0.47uF	25V
C325	1-126-049-11	ELECT	22uF	20% 25V
C326	1-126-049-11	ELECT	22uF	20% 25V
C602	1-126-059-11	ELECT	10uF	20% 50V
C603	1-164-346-11	CERAMIC CHIP	1uF	16V
C604	1-163-097-00	CERAMIC CHIP	15PF	5% 50V
C605	1-163-097-00	CERAMIC CHIP	15PF	5% 50V
C606	1-163-009-11	CERAMIC CHIP	0.001uF	10% 50V
C607	1-164-232-11	CERAMIC CHIP	0.01uF	50V
C608	1-124-589-11	ELECT	47uF	20% 16V
C609	1-124-589-11	ELECT	47uF	20% 16V
C610	1-126-154-11	ELECT	47uF	20% 6.3V
C611	1-163-222-11	CERAMIC CHIP	5PF	0.25PF 50V
C612	1-163-222-11	CERAMIC CHIP	5PF	0.25PF 50V
C613	1-164-005-11	CERAMIC CHIP	0.47uF	25V
C614	1-124-994-11	ELECT	100uF	20% 10V
C615	1-163-038-00	CERAMIC CHIP	0.1uF	25V
C621	1-163-038-00	CERAMIC CHIP	0.1uF	25V
C622	1-163-038-00	CERAMIC CHIP	0.1uF	25V
C682	1-124-257-00	ELECT	2.2uF	20% 50V
C683	1-124-257-00	ELECT	2.2uF	20% 50V

< CONNECTOR >

* CN10	1-695-808-11	CONNECTOR, PC BOARD 8P	
* CN20	1-695-808-11	CONNECTOR, PC BOARD 8P	
* CN30	1-695-808-11	CONNECTOR, PC BOARD 8P	

The components identified by mark ⚠ or dotted line with mark. ⚠ are critical for safety. Replace only with part number specified.

MAIN

Ref. No.	Part No.	Description	Remark
* CN40	1-695-808-11	CONNECTOR, PC BOARD 8P	
* CN50	1-695-808-11	CONNECTOR, PC BOARD 8P	
* CN101	1-568-842-11	SOCKET, CONNECTOR 27P	
* CN102	1-568-832-11	SOCKET, CONNECTOR 13P	
* CN103	1-568-834-11	SOCKET, CONNECTOR 15P	
		< DIODE >	
D601	8-719-990-36	DIODE DCA010	
D602	8-719-990-36	DIODE DCA010	
D603	8-719-800-76	DIODE 1SS226	
D604	8-719-990-36	DIODE DCA010	
D608	8-719-990-36	DIODE DCA010	
		< FERRITE BEAD >	
FB201	1-410-397-21	FERRITE BEAD INDUCTOR	
FB601	1-410-397-21	FERRITE BEAD INDUCTOR	
		< IC >	
IC154	8-759-700-65	IC NJM79L05A	
IC155	8-759-189-22	IC M5278L05-TP	
IC601	8-759-259-00	IC HD6433298A22F	
IC603	8-759-082-94	IC SPC5243M0B	
IC605	8-759-991-11	IC XR1091DCP	
IC606	8-759-248-66	IC AT24C01-10PC	
IC607	8-759-300-71	IC HD14053BFP	
IC608	8-759-165-88	IC PST600K-T	
IC609	8-759-165-81	IC PST600D-T	
		< JUMPER RESISTOR >	
JR6	1-216-295-00	METAL GLAZE 0 5% 1/10W	
JR7	1-216-296-00	METAL GLAZE 0 5% 1/8W	
		< COIL >	
L601	1-410-478-11	INDUCTOR 47uH	
		< TRANSISTOR >	
Q310	8-729-805-65	TRANSISTOR 2SA1344	
Q311	8-729-805-65	TRANSISTOR 2SA1344	
Q312	8-729-805-41	TRANSISTOR 2SC3398	
Q401	8-729-107-46	TRANSISTOR 2SC3624A-L15	
Q451	8-729-107-46	TRANSISTOR 2SC3624A-L15	
Q602	8-729-805-43	TRANSISTOR 2SC3396	
Q611	8-729-120-28	TRANSISTOR 2SC1623-L5L6	
Q670	8-729-805-41	TRANSISTOR 2SC3398	
Q671	8-729-805-41	TRANSISTOR 2SC3398	
Q672	8-729-805-41	TRANSISTOR 2SC3398	
Q673	8-729-805-41	TRANSISTOR 2SC3398	

Ref. No.	Part No.	Description	Remark
		< RESISTOR >	
R324	1-216-049-00	METAL CHIP 1K 5% 1/10W	
R325	1-216-073-00	METAL CHIP 10K 5% 1/10W	
R326	1-216-073-00	METAL CHIP 10K 5% 1/10W	
R327	1-216-097-00	METAL CHIP 100K 5% 1/10W	
R408	1-216-049-00	METAL CHIP 1K 5% 1/10W	
R418	1-216-073-00	METAL CHIP 10K 5% 1/10W	
R458	1-216-049-00	METAL CHIP 1K 5% 1/10W	
R468	1-216-073-00	METAL CHIP 10K 5% 1/10W	
R601	1-216-097-00	METAL CHIP 100K 5% 1/10W	
R602	1-216-049-00	METAL CHIP 1K 5% 1/10W	
R603	1-216-097-00	METAL CHIP 100K 5% 1/10W	
R604	1-216-073-00	METAL CHIP 10K 5% 1/10W	
R605	1-216-097-00	METAL CHIP 100K 5% 1/10W	
R606	1-216-025-00	METAL CHIP 100 5% 1/10W	
R607	1-216-073-00	METAL CHIP 10K 5% 1/10W	
R609	1-216-053-00	METAL CHIP 1.5K 5% 1/10W	
R610	1-216-041-00	METAL CHIP 470 5% 1/10W	
R611	1-216-025-00	METAL CHIP 100 5% 1/10W	
R612	1-216-025-00	METAL CHIP 100 5% 1/10W	
R613	1-216-025-00	METAL CHIP 100 5% 1/10W	
R614	1-216-099-00	METAL CHIP 120K 5% 1/10W	
R615	1-216-099-00	METAL CHIP 120K 5% 1/10W	
R616	1-216-089-91	METAL GLAZE 47K 5% 1/10W	
R617	1-216-089-91	METAL GLAZE 47K 5% 1/10W	
R618	1-216-089-91	METAL GLAZE 47K 5% 1/10W	
R619	1-216-049-00	METAL CHIP 1K 5% 1/10W	
R620	1-216-025-00	METAL CHIP 100 5% 1/10W	
R621	1-216-025-00	METAL CHIP 100 5% 1/10W	
R622	1-216-025-00	METAL CHIP 100 5% 1/10W	
R623	1-216-025-00	METAL CHIP 100 5% 1/10W	
R624	1-216-025-00	METAL CHIP 100 5% 1/10W	
R625	1-216-025-00	METAL CHIP 100 5% 1/10W	
R626	1-216-025-00	METAL CHIP 100 5% 1/10W	
R627	1-216-025-00	METAL CHIP 100 5% 1/10W	
R628	1-216-025-00	METAL CHIP 100 5% 1/10W	
R629	1-216-025-00	METAL CHIP 100 5% 1/10W	
R630	1-216-025-00	METAL CHIP 100 5% 1/10W	
R631	1-216-025-00	METAL CHIP 100 5% 1/10W	
R632	1-216-025-00	METAL CHIP 100 5% 1/10W	
R633	1-216-025-00	METAL CHIP 100 5% 1/10W	
R634	1-216-025-00	METAL CHIP 100 5% 1/10W	
R635	1-216-025-00	METAL CHIP 100 5% 1/10W	
R636	1-216-025-00	METAL CHIP 100 5% 1/10W	
R637	1-216-025-00	METAL CHIP 100 5% 1/10W	
R638	1-216-025-00	METAL CHIP 100 5% 1/10W	
R639	1-216-049-00	METAL CHIP 1K 5% 1/10W (AE, UK)	

Ref. No.	Part No.	Description			Remark
R640	1-216-049-00	METAL CHIP	1K	5%	1/10W (EXCEPT AEP, UK)
R641	1-216-049-00	METAL CHIP	1K	5%	1/10W (EXCEPT AEP, UK)
R642	1-216-049-00	METAL CHIP	1K	5%	1/10W (AE, UK)
R649	1-216-073-00	METAL CHIP	10K	5%	1/10W
R651	1-216-065-00	METAL CHIP	4.7K	5%	1/10W
R652	1-216-001-00	METAL CHIP	10	5%	1/10W
R653	1-216-073-00	METAL CHIP	10K	5%	1/10W
R661	1-216-025-00	METAL CHIP	100	5%	1/10W
R662	1-216-025-00	METAL CHIP	100	5%	1/10W
R663	1-216-025-00	METAL CHIP	100	5%	1/10W
R664	1-216-025-00	METAL CHIP	100	5%	1/10W
R665	1-216-025-00	METAL CHIP	100	5%	1/10W
R670	1-216-097-00	METAL CHIP	100K	5%	1/10W
R671	1-216-097-00	METAL CHIP	100K	5%	1/10W
R672	1-216-097-00	METAL CHIP	100K	5%	1/10W
R673	1-216-097-00	METAL CHIP	100K	5%	1/10W
R680	1-216-097-00	METAL CHIP	100K	5%	1/10W
R681	1-216-097-00	METAL CHIP	100K	5%	1/10W
R682	1-216-097-00	METAL CHIP	100K	5%	1/10W
R683	1-216-097-00	METAL CHIP	100K	5%	1/10W
		< VIBRATOR >			
X601	1-567-928-11	VIBLATOR, CERAMIC (20MHz)			
X602	1-567-098-41	VIBRATOR, CRYSTAL (32.768KHz)			
**********					
*	A-4369-232-A	PANEL BOARD, COMPLETE (EXCEPT UK)			
		**********			
*	A-4369-547-A	PANEL BOARD, COMPLETE (UK)			
		**********			
*	4-932-810-11	CUSHION (FL)			
		< CAPACITOR >			
C701	1-164-232-11	CERAMIC CHIP	0.01uF		50V
C702	1-124-584-00	ELECT	100uF	20%	10V
C703	1-124-261-00	ELECT	10uF	20%	50V
C704	1-165-319-11	CERAMIC CHIP	0.1uF		50V
C705	1-164-232-11	CERAMIC CHIP	0.01uF		50V
C711	1-164-232-11	CERAMIC CHIP	0.01uF		50V
C712	1-124-584-00	ELECT	100uF	20%	10V
C713	1-124-261-00	ELECT	10uF	20%	50V
C714	1-164-232-11	CERAMIC CHIP	0.01uF		50V
C715	1-164-232-11	CERAMIC CHIP	0.01uF		50V
C720	1-164-232-11	CERAMIC CHIP	0.01uF		50V
C721	1-163-251-11	CERAMIC CHIP	100PF	5%	50V
C722	1-163-251-11	CERAMIC CHIP	100PF	5%	50V
C723	1-163-251-11	CERAMIC CHIP	100PF	5%	50V
C724	1-163-251-11	CERAMIC CHIP	100PF	5%	50V
C725	1-163-251-11	CERAMIC CHIP	100PF	5%	50V
C726	1-163-251-11	CERAMIC CHIP	100PF	5%	50V
C727	1-163-251-11	CERAMIC CHIP	100PF	5%	50V
C728	1-163-251-11	CERAMIC CHIP	100PF	5%	50V
C729	1-163-251-11	CERAMIC CHIP	100PF	5%	50V
C730	1-163-251-11	CERAMIC CHIP	100PF	5%	50V
C731	1-163-251-11	CERAMIC CHIP	100PF	5%	50V
C732	1-163-251-11	CERAMIC CHIP	100PF	5%	50V
C733	1-163-251-11	CERAMIC CHIP	100PF	5%	50V
C734	1-163-251-11	CERAMIC CHIP	100PF	5%	50V
C735	1-163-251-11	CERAMIC CHIP	100PF	5%	50V
C741	1-164-346-11	CERAMIC CHIP	1uF		16V
C781	1-164-232-11	CERAMIC CHIP	0.01uF		50V
C788	1-164-232-11	CERAMIC CHIP	0.01uF		50V
C789	1-164-232-11	CERAMIC CHIP	0.01uF		50V
C790	1-163-009-11	CERAMIC CHIP	0.001uF	10%	50V
C791	1-163-009-11	CERAMIC CHIP	0.001uF	10%	50V
C792	1-163-009-11	CERAMIC CHIP	0.001uF	10%	50V
C793	1-124-261-00	ELECT	10uF	20%	50V
		< CONNECTOR >			
* CN701	1-568-834-11	SOCKET, CONNECTOR 15P			
		< DIODE >			
D781	8-719-032-98	DIODE SEL5820A-E (DOLBY PRO LOGIC)			
D782	8-719-301-37	DIODE SEL2210S-CD (CURSOR CONTROL)			
D783	8-719-032-87	DIODE SEL5420E-TP15 (ONCE)			
D784	8-719-032-87	DIODE SEL5420E-TP15 (DAILY)			
D785	8-719-032-83	DIODE SEL5220S-TP15 (REC)			
D786	8-719-032-87	DIODE SEL5420E-TP15 (SLEEP)			
		< FILTER >			
FL701	1-519-649-11	INDICATOR TUBE, FLUORESCENT			
		< IC >			
IC701	8-759-192-74	IC M38122M2-062FP			
IC711	8-759-254-76	IC M66004M4FP-T2			
IC741	8-759-926-20	IC SN74HC160NS			
		< COIL >			
L701	1-410-393-11	INDUCTOR CHIP 100uH			
L711	1-410-393-11	INDUCTOR CHIP 100uH			
		< TRANSISTOR >			
Q731	8-729-120-28	TRANSISTOR 2SC1623-L5L6			

PANEL PIN JACK

Ref. No.	Part No.	Description				Remark
Q732	8-729-600-22	TRANSISTOR	2SA1235-F			
Q781	8-729-805-41	TRANSISTOR	2SC3398			
Q782	8-729-805-41	TRANSISTOR	2SC3398			
Q783	8-729-805-41	TRANSISTOR	2SC3398			
Q784	8-729-805-41	TRANSISTOR	2SC3398			
Q785	8-729-805-41	TRANSISTOR	2SC3398			
Q786	8-729-805-41	TRANSISTOR	2SC3398			
		< RESISTOR >				
R711	1-216-025-00	METAL CHIP	100	5%	1/10W	
R712	1-216-025-00	METAL CHIP	100	5%	1/10W	
R713	1-216-025-00	METAL CHIP	100	5%	1/10W	
R714	1-216-025-00	METAL CHIP	100	5%	1/10W	
R715	1-216-025-00	METAL CHIP	100	5%	1/10W	
R716	1-216-025-00	METAL CHIP	100	5%	1/10W	
R717	1-216-025-00	METAL CHIP	100	5%	1/10W	
R731	1-216-097-00	METAL CHIP	100K	5%	1/10W	
R732	1-216-073-00	METAL CHIP	10K	5%	1/10W	
R733	1-216-097-00	METAL CHIP	100K	5%	1/10W	
R734	1-216-073-00	METAL CHIP	10K	5%	1/10W	
R735	1-216-073-00	METAL CHIP	10K	5%	1/10W	
R736	1-216-073-00	METAL CHIP	10K	5%	1/10W	
R740	1-216-053-00	METAL CHIP	1.5K	5%	1/10W	
R741	1-216-025-00	METAL CHIP	100	5%	1/10W	
R742	1-216-027-00	METAL CHIP	120	5%	1/10W	
R743	1-216-027-00	METAL CHIP	120	5%	1/10W	
R744	1-216-029-00	METAL CHIP	150	5%	1/10W	
R745	1-216-045-00	METAL CHIP	680	5%	1/10W	
R746	1-216-037-00	METAL CHIP	330	5%	1/10W	
R747	1-216-049-00	METAL CHIP	1K	5%	1/10W	
R748	1-216-047-00	METAL CHIP	820	5%	1/10W	
R749	1-216-051-00	METAL CHIP	1.2K	5%	1/10W	
R760	1-216-053-00	METAL CHIP	1.5K	5%	1/10W	
R761	1-216-025-00	METAL CHIP	100	5%	1/10W	
R762	1-216-027-00	METAL CHIP	120	5%	1/10W	
R763	1-216-027-00	METAL CHIP	120	5%	1/10W	
R764	1-216-029-00	METAL CHIP	150	5%	1/10W	
R765	1-216-045-00	METAL CHIP	680	5%	1/10W	
R766	1-216-037-00	METAL CHIP	330	5%	1/10W	
R767	1-216-049-00	METAL CHIP	1K	5%	1/10W	
R768	1-216-047-00	METAL CHIP	820	5%	1/10W	
R769	1-216-051-00	METAL CHIP	1.2K	5%	1/10W	
R770	1-216-067-00	METAL CHIP	5.6K	5%	1/10W	
R781	1-216-033-00	METAL CHIP	220	5%	1/10W	
R782	1-216-033-00	METAL CHIP	220	5%	1/10W	
R783	1-216-027-00	METAL CHIP	120	5%	1/10W	
R784	1-216-027-00	METAL CHIP	120	5%	1/10W	
R785	1-216-033-00	METAL CHIP	220	5%	1/10W	
R786	1-216-027-00	METAL CHIP	120	5%	1/10W	

Ref. No.	Part No.	Description				Remark
		< SWITCH >				
S740	1-554-303-21	SWITCH, TACTILE (CLOCK SET)				
S741	1-554-303-21	SWITCH, TACTILE (TIMER SET)				
S742	1-554-303-21	SWITCH, TACTILE (ONCE)				
S743	1-554-303-21	SWITCH, TACTILE (DALIY)				
S744	1-554-303-21	SWITCH, TACTILE (REC)				
S745	1-554-303-21	SWITCH, TACTILE (SLEEP)				
S746	1-554-303-21	SWITCH, TACTILE (KARAOKE PON)				
S747	1-554-303-21	SWITCH, TACTILE (DPE)				
S748	1-554-303-21	SWITCH, TACTILE (DSP)				
S749	1-554-303-21	SWITCH, TACTILE (CANCEL)				
S760	1-554-303-21	SWITCH, TACTILE (DOLBY PRO LOGIC)				
S761	1-554-303-21	SWITCH, TACTILE (DIRECT)				
S762	1-554-303-21	SWITCH, TACTILE (DIGTAL MENU: MENU1)				
S763	1-554-303-21	SWITCH, TACTILE (DIGTAL MENU: MENU2)				
S764	1-554-303-21	SWITCH, TACTILE (P FILE)				
S765	1-554-303-21	SWITCH, TACTILE (DISPLAY)				
S766	1-554-303-21	SWITCH, TACTILE (ENTER/NEXT)				
S767	1-554-303-21	SWITCH, TACTILE (▷)				
S768	1-554-303-21	SWITCH, TACTILE (▽)				
S769	1-554-303-21	SWITCH, TACTILE (△)				
S770	1-554-303-21	SWITCH, TACTILE (◁)				
		< VIBRATOR >				
X701	1-577-360-11	VIBRATOR, CERAMIC (6MHz)				
**********						
*	A-4369-543-A	PIN JACK BOARD, COMPLETE (UK)				
		**********				
*	A-4369-549-A	PIN JACK BOARD, COMPLETE (EXCEPT UK)				
		**********				
		< CAPACITOR >				
C502	1-163-001-11	CERAMIC CHIP	220PF	10%	50V	
C503	1-163-003-11	CERAMIC CHIP	330PF	10%	50V	
C504	1-163-003-11	CERAMIC CHIP	330PF	10%	50V	
C505	1-163-003-11	CERAMIC CHIP	330PF	10%	50V	
C506	1-163-003-11	CERAMIC CHIP	330PF	10%	50V	
C507	1-163-001-11	CERAMIC CHIP	220PF	10%	50V	
C509	1-163-003-11	CERAMIC CHIP	330PF	10%	50V	
C510	1-163-003-11	CERAMIC CHIP	330PF	10%	50V	
C511	1-163-003-11	CERAMIC CHIP	330PF	10%	50V	
C512	1-163-003-11	CERAMIC CHIP	330PF	10%	50V	
C513	1-163-003-11	CERAMIC CHIP	330PF	10%	50V	
C514	1-163-003-11	CERAMIC CHIP	330PF	10%	50V	
C515	1-163-251-11	CERAMIC CHIP	100PF	5%	50V	
C516	1-163-251-11	CERAMIC CHIP	100PF	5%	50V	
C517	1-164-232-11	CERAMIC CHIP	0.01uF		50V	

Ref. No.	Part No.	Description			Remark
C518	1-164-232-11	CERAMIC CHIP	0.01uF		50V
C519	1-163-251-11	CERAMIC CHIP	100PF	5%	50V
C520	1-163-251-11	CERAMIC CHIP	100PF	5%	50V
C521	1-163-001-11	CERAMIC CHIP	220PF	10%	50V
C522	1-163-001-11	CERAMIC CHIP	220PF	10%	50V
C523	1-126-022-11	ELECT	47uF	20%	16V
C525	1-126-161-11	ELECT	2.2uF	20%	50V
C526	1-126-161-11	ELECT	2.2uF	20%	50V
C527	1-126-161-11	ELECT	2.2uF	20%	50V
C528	1-126-161-11	ELECT	2.2uF	20%	50V
C529	1-163-038-00	CERAMIC CHIP	0.1uF		25V
C530	1-163-038-00	CERAMIC CHIP	0.1uF		25V
C551	1-126-160-11	ELECT	1uF	20%	50V
C552	1-126-160-11	ELECT	1uF	20%	50V
C553	1-126-160-11	ELECT	1uF	20%	50V
C554	1-126-925-11	ELECT	470uF	20%	10V
C555	1-126-925-11	ELECT	470uF	20%	10V
C556	1-126-925-11	ELECT	470uF	20%	10V
C557	1-164-232-11	CERAMIC CHIP	0.01uF		50V
C558	1-164-232-11	CERAMIC CHIP	0.01uF		50V
C559	1-124-589-11	ELECT	47uF	20%	16V
C560	1-164-232-11	CERAMIC CHIP	0.01uF		50V
C561	1-126-022-11	ELECT	47uF	20%	16V
C562	1-163-038-00	CERAMIC CHIP	0.1uF		25V
C563	1-163-038-00	CERAMIC CHIP	0.1uF		25V
C565	1-163-059-91	CERAMIC CHIP	0.01uF	10%	50V
C571	1-164-005-11	CERAMIC CHIP	0.47uF		25V
C572	1-163-001-11	CERAMIC CHIP	220PF	10%	50V
C573	1-126-163-11	ELECT	4.7uF	20%	50V
C574	1-163-018-00	CERAMIC CHIP	0.0056uF	5%	50V
C575	1-163-011-11	CERAMIC CHIP	0.0015uF	10%	50V
C576	1-164-505-11	CERAMIC CHIP	2.2uF		16V
C577	1-163-251-11	CERAMIC CHIP	100PF	5%	50V
C578	1-164-232-11	CERAMIC CHIP	0.01uF		50V
C579	1-164-232-11	CERAMIC CHIP	0.01uF		50V
C581	1-164-005-11	CERAMIC CHIP	0.47uF		25V
C582	1-163-001-11	CERAMIC CHIP	220PF	10%	50V
C583	1-126-163-11	ELECT	4.7uF	20%	50V
C584	1-163-018-00	CERAMIC CHIP	0.0056uF	5%	50V
C585	1-163-011-11	CERAMIC CHIP	0.0015uF	10%	50V
C586	1-164-505-11	CERAMIC CHIP	2.2uF		16V
C587	1-163-251-11	CERAMIC CHIP	100PF	5%	50V

< CONNECTOR >

CN501	1-580-740-31	SOCKET, CONNECTOR 17P	
* CN502	1-568-869-11	SOCKET, CONNECTOR 27P	

Ref. No.	Part No.	Description	Remark
		< FERRITE BEAD >	
FB551	1-410-397-21	FERRITE BEAD INDUCTOR	
		< IC >	
IC501	8-759-195-17	IC SC027MG052BF-T1	
IC502	8-759-195-17	IC SC027MG052BF-T1	
IC503	8-759-195-17	IC SC027MG052BF-T1	
IC504	8-759-636-55	IC M5218AFP	
IC551	8-759-061-95	IC SN761200	
IC571	8-759-636-55	IC M5218AFP	
		< JACK >	
* J501	1-569-812-11	JACK, PIN 6P (VIDEO 1:AUDIO IN, OUT, MD/DAT/VIDEO 2:AUDIO IN)	
J502	1-565-304-11	JACK, PIN 4P (MD/DAT/VIDEO 2:AUDIO OUT)	
J551	1-565-933-11	JACK, PIN 3P (MONITOR :VIDEOOUT, VIDEO 1:VIDEO IN, OUT)	
J552	1-573-144-11	JACK, PIN 2P (MD/DAT/VIDEO 2:VIDEO IN, OUT)	
		< TRANSISTOR >	
Q501	8-729-107-46	TRANSISTOR 2SC3624A-L15	
Q502	8-729-107-46	TRANSISTOR 2SC3624A-L15	
Q503	8-729-107-46	TRANSISTOR 2SC3624A-L15	
Q504	8-729-107-46	TRANSISTOR 2SC3624A-L15	
Q551	8-729-600-22	TRANSISTOR 2SA1235-F	
Q552	8-729-600-22	TRANSISTOR 2SA1235-F	
Q553	8-729-600-22	TRANSISTOR 2SA1235-F	
		< RESISTOR >	
R502	1-216-065-00	METAL CHIP 4.7K 5%	1/10W
R503	1-216-086-00	METAL GLAZE 36K 5%	1/10W
R504	1-216-086-00	METAL GLAZE 36K 5%	1/10W
R505	1-216-086-00	METAL GLAZE 36K 5%	1/10W
R506	1-216-086-00	METAL GLAZE 36K 5%	1/10W
R507	1-216-065-00	METAL CHIP 4.7K 5%	1/10W
R510	1-216-097-00	METAL CHIP 100K 5%	1/10W
R511	1-216-115-00	METAL CHIP 560K 5%	1/10W
R512	1-216-115-00	METAL CHIP 560K 5%	1/10W
R513	1-216-115-00	METAL CHIP 560K 5%	1/10W
R514	1-216-115-00	METAL CHIP 560K 5%	1/10W
R515	1-216-097-00	METAL CHIP 100K 5%	1/10W
R517	1-216-041-00	METAL CHIP 470 5%	1/10W
R518	1-216-041-00	METAL CHIP 470 5%	1/10W
R519	1-216-041-00	METAL CHIP 470 5%	1/10W
R520	1-216-041-00	METAL CHIP 470 5%	1/10W
R521	1-216-041-00	METAL CHIP 470 5%	1/10W
R522	1-216-041-00	METAL CHIP 470 5%	1/10W
R523	1-216-115-00	METAL CHIP 560K 5%	1/10W

PIN JACK

POWER SUPPLY

Ref. No.	Part No.	Description			Remark
R524	1-216-115-00	METAL CHIP	560K	5%	1/10W
R525	1-216-115-00	METAL CHIP	560K	5%	1/10W
R526	1-216-115-00	METAL CHIP	560K	5%	1/10W
R527	1-216-115-00	METAL CHIP	560K	5%	1/10W
R528	1-216-115-00	METAL CHIP	560K	5%	1/10W
R529	1-216-025-00	METAL CHIP	100	5%	1/10W
R530	1-216-025-00	METAL CHIP	100	5%	1/10W
R531	1-216-049-00	METAL CHIP	1K	5%	1/10W
R532	1-216-049-00	METAL CHIP	1K	5%	1/10W
R533	1-216-049-00	METAL CHIP	1K	5%	1/10W
R534	1-216-049-00	METAL CHIP	1K	5%	1/10W
R535	1-216-049-00	METAL CHIP	1K	5%	1/10W
R536	1-216-049-00	METAL CHIP	1K	5%	1/10W
R537	1-216-089-91	METAL GLAZE	47K	5%	1/10W
R538	1-216-089-91	METAL GLAZE	47K	5%	1/10W
R539	1-216-025-00	METAL CHIP	100	5%	1/10W
R540	1-216-025-00	METAL CHIP	100	5%	1/10W
R541	1-216-025-00	METAL CHIP	100	5%	1/10W
R542	1-216-025-00	METAL CHIP	100	5%	1/10W
R543	1-216-097-00	METAL CHIP	100K	5%	1/10W
R544	1-216-097-00	METAL CHIP	100K	5%	1/10W
R546	1-216-049-00	METAL CHIP	1K	5%	1/10W
R547	1-216-049-00	METAL CHIP	1K	5%	1/10W
R548	1-216-049-00	METAL CHIP	1K	5%	1/10W
R549	1-216-049-00	METAL CHIP	1K	5%	1/10W
R551	1-216-022-00	METAL CHIP	75	5%	1/10W
R552	1-216-022-00	METAL CHIP	75	5%	1/10W
R553	1-216-022-00	METAL CHIP	75	5%	1/10W
R554	1-216-022-00	METAL CHIP	75	5%	1/10W
R555	1-216-022-00	METAL CHIP	75	5%	1/10W
R556	1-216-022-00	METAL CHIP	75	5%	1/10W
R557	1-216-049-00	METAL CHIP	1K	5%	1/10W
R558	1-216-049-00	METAL CHIP	1K	5%	1/10W
R559	1-216-049-00	METAL CHIP	1K	5%	1/10W
R560	1-216-025-00	METAL CHIP	100	5%	1/10W
R561	1-216-025-00	METAL CHIP	100	5%	1/10W
R562	1-216-025-00	METAL CHIP	100	5%	1/10W
R563	1-216-031-00	METAL CHIP	180	5%	1/10W
R564	1-216-031-00	METAL CHIP	180	5%	1/10W
R565	1-216-031-00	METAL CHIP	180	5%	1/10W
R567	1-216-073-00	METAL CHIP	10K	5%	1/10W
R568	1-216-073-00	METAL CHIP	10K	5%	1/10W
R569	1-216-025-00	METAL CHIP	100	5%	1/10W
R570	1-216-025-00	METAL CHIP	100	5%	1/10W
R571	1-216-089-91	METAL GLAZE	47K	5%	1/10W
R572	1-216-045-00	METAL CHIP	680	5%	1/10W
R573	1-216-115-00	METAL CHIP	560K	5%	1/10W
R574	1-216-089-91	METAL GLAZE	47K	5%	1/10W
R575	1-216-001-00	METAL CHIP	10	5%	1/10W
R576	1-216-097-00	METAL CHIP	100K	5%	1/10W
R581	1-216-089-91	METAL GLAZE	47K	5%	1/10W
R582	1-216-045-00	METAL CHIP	680	5%	1/10W
R583	1-216-115-00	METAL CHIP	560K	5%	1/10W
R584	1-216-089-91	METAL GLAZE	47K	5%	1/10W
R585	1-216-001-00	METAL CHIP	10	5%	1/10W
R586	1-216-097-00	METAL CHIP	100K	5%	1/10W

****

* A-4369-540-A POWER SUPPLY BOARD, COMPLETE
****
(EXCEPT AEP, UK)

* A-4369-544-A POWER SUPPLY BOARD, COMPLETE (UK)
****

* A-4369-550-A POWER SUPPLY BOARD, COMPLETE (AEP)
****

* 1-533-213-31 HOLDER, FUSE
* 3-309-144-21 HEAT SINK
7-682-547-09 SCREW +BVTT 3X6 (S)

< CAPACITOR >

C901	1-126-027-11	ELECT	1000uF	20%	25V
C903	1-164-346-11	CERAMIC CHIP	1uF		16V
C904	1-124-360-00	ELECT	1000uF	20%	16V
C905	1-164-232-11	CERAMIC CHIP	0.01uF		50V
C906	1-164-232-11	CERAMIC CHIP	0.01uF		50V
C907	1-165-319-11	CERAMIC CHIP	0.1uF		50V
C951	1-126-027-11	ELECT	1000uF	20%	25V
C954	1-124-360-00	ELECT	1000uF	20%	16V
C955	1-126-943-11	ELECT	2200uF	20%	25V
C962	1-124-910-11	ELECT	47uF	20%	50V
C963	1-165-319-11	CERAMIC CHIP	0.1uF		50V
C964	1-164-232-11	CERAMIC CHIP	0.01uF		50V
C965	1-164-232-11	CERAMIC CHIP	0.01uF		50V
C966	1-165-319-11	CERAMIC CHIP	0.1uF		50V
C967	1-126-059-11	ELECT	10uF	20%	50V

< CONNECTOR >

* CN902 1-568-832-11 SOCKET, CONNECTOR 13P
* CN903 1-573-273-11 PIN, CONNECTOR 3P
* CN905 1-573-262-11 PIN, CONNECTOR 3P
CN908 1-751-217-21 LEAD (WITH CONNECTOR) (3 CORE)
(EXCEPT AEP, UK)

CN908 1-751-325-21 LEAD (WITH CONNECTOR) (2 CORE) (AE, UK)

POWER SUPPLY REGULATOR

Ref. No.	Part No.	Description				Remark
		< DIODE >				
D901	8-719-200-02	DIODE	10E2			
D902	8-719-200-02	DIODE	10E2			
D903	8-719-200-02	DIODE	10E2			
D904	8-719-200-02	DIODE	10E2			
D905	8-719-200-02	DIODE	10E2			
D906	8-719-200-02	DIODE	10E2			
D907	8-719-200-02	DIODE	10E2			
D908	8-719-016-02	DIODE	UZP-30B-TP			
D909	8-719-014-56	DIODE	UZP-5.1B			
		< FUSE >				
⚠F902	1-532-203-00	FUSE, TIME-LAG	(2A 250V)			
⚠F903	1-532-203-00	FUSE, TIME-LAG	(2A 250V)			
		< IC >				
IC901	8-759-602-66	IC	M5230L-A			
		< IC LINK >				
⚠ICP904	1-532-840-21	LI	NK, IC			
⚠ICP905	1-532-840-21	LI	NK, IC			
		< TRANSISTOR >				
Q901	8-729-141-83	TRANSISTOR	2SB1094-LK			
Q902	8-729-805-41	TRANSISTOR	2SC3398			
Q903	8-729-118-01	TRANSISTOR	2SB1116-K			
Q904	8-729-805-41	TRANSISTOR	2SC3398			
Q905	8-729-018-59	TRANSISTOR	2SB1375-LC			
Q951	8-729-209-15	TRANSISTOR	2SD2012			
		< RESISTOR >				
R901	1-216-033-00	METAL CHIP	220	5%	1/10W	
R903	1-216-043-00	METAL CHIP	560	5%	1/10W	
R904	1-216-043-00	METAL CHIP	560	5%	1/10W	
R905	1-216-079-00	METAL CHIP	18K	5%	1/10W	
R906	1-216-061-00	METAL CHIP	3.3K	5%	1/10W	
R907	1-216-077-00	METAL CHIP	15K	5%	1/10W	
R908	1-216-077-00	METAL CHIP	15K	5%	1/10W	
R909	1-216-113-00	METAL CHIP	470K	5%	1/10W	
R910	1-216-033-00	METAL CHIP	220	5%	1/10W	
R911	1-216-033-00	METAL CHIP	220	5%	1/10W	
R912	1-216-057-00	METAL CHIP	2.2K	5%	1/10W	
R913	1-216-073-00	METAL CHIP	10K	5%	1/10W	
R916	1-216-097-00	METAL CHIP	100K	5%	1/10W	
R917	1-216-073-00	METAL CHIP	10K	5%	1/10W	
R918	1-216-033-00	METAL CHIP	220	5%	1/10W	
⚠R919	1-219-122-91	FUSIBLE	0.33	5%	1/4W F	
⚠R920	1-219-122-91	FUSIBLE	0.33	5%	1/4W F	
⚠R921	1-212-865-00	FUSIBLE	22	5%	1/4W F	
R922	1-216-049-00	METAL CHIP	1K	5%	1/10W	
R923	1-216-049-00	METAL CHIP	1K	5%	1/10W	
R951	1-216-033-00	METAL CHIP	220	5%	1/10W	
		< SWITCH >				
SW901	1-572-675-11	SWITCH, POWER VOLTAGE CHANGE (VOLTAGE SELECTOR) (EXCEPT AEP, UK)				
		< TRANSFORMER >				
⚠T901	1-426-696-11	TRANSFORMER, POWER (AEP)				
⚠T901	1-426-697-11	TRANSFORMER, POWER (UK)				
⚠T901	1-426-698-11	TRANSFORMER, POWER (EXCEPT AEP, UK)				
**********						
*	1-649-849-15	REGULATOR BOARD				
		< CAPACITOR >				
C971	1-126-059-11	ELECT	10uF	20%	50V	
C972	1-126-059-11	ELECT	10uF	20%	50V	
C973	1-165-319-11	CERAMIC CHIP	0.1uF		50V	
C974	1-165-319-11	CERAMIC CHIP	0.1uF		50V	
		< IC >				
IC971	8-759-231-53	IC	TA7805S			
		< RESISTOR >				
R971	1-215-908-00	METAL OXIDE	33	5%	3W F	
R972	1-215-908-00	METAL OXIDE	33	5%	3W F	
R973	1-215-908-00	METAL OXIDE	33	5%	3W F	
**********						
		MISCELLANEOUS				
		**********				
3	1-690-094-11	WIRE, FLAT TYPE (15 CORE)				
12	1-751-614-11	WIRE (FLAT TYPE) (27 CORE)				
* 17	1-695-810-11	CONNECTOR, PC BOARD (PLUG) 8P				
19	1-590-036-11	WIRE, FLAT TYPE (13 CORE)				
**********						
		**********				
		HARDWARE LIST				
		**********				
#1	7-682-547-09	SCREW +BVTT	3X6 (S)			
#2	7-685-647-79	SCREW +BVTP	3X10 TYPE2 N-S			
#3	7-682-548-04	SCREW +BVTT	3X8 (S)			
#4	7-621-849-00	SCREW, TAPPING				

The components identified by mark ⚠ or dotted line with mark. ⚠ are critical for safety. Replace only with part number specified.

English
94E0575-1
Printed in Japan
© 1994. 5

9-959-584-11

Sony Corporation
Consumer A&V Products Company
Home A&V Products Div.

Published by Home A&V Products Div.
Quality Engineering Dept.

SS-H5900

SERVICE MANUAL

Photo : R-CH

AEP Model
UK Model
E Model
Australian Model
Tourist Model

This set is the speaker system in MHC-5900/MHC-E90X.

SPECIFICATIONS

System	Built-in centre/rear speaker, 2-way bass reflex
Speaker units	
Woofer:	15 cm dia., cone type
Tweeter:	2.5 cm dia., soft dome type
CENTER:	6 cm dia., cone type
REAR:	8 cm dia., cone type
Rated impedance	6 ohms
Dimensions	Approx. 210 × 445 × 275 mm ($8\,^3/_8 \times 17\,^5/_8 \times 10\,^7/_8$ inches)
Mass	Approx. 6.4 kg (14 lb 2 oz)

Design and specifications are subject to change without notice.

SPEAKER SYSTEM

SONY®

EXPLODED VIEW AND PARTS LIST

NOTE:

- Items marked " * " are not stocked since they are seldom required for routine service. Some delay should be anticipated when ordering these items.
- -XX, -X mean standardized parts, so they may have some difference from the original one.
- The mechanical parts with no reference number in the exploded views are not supplied.

— L-CH —

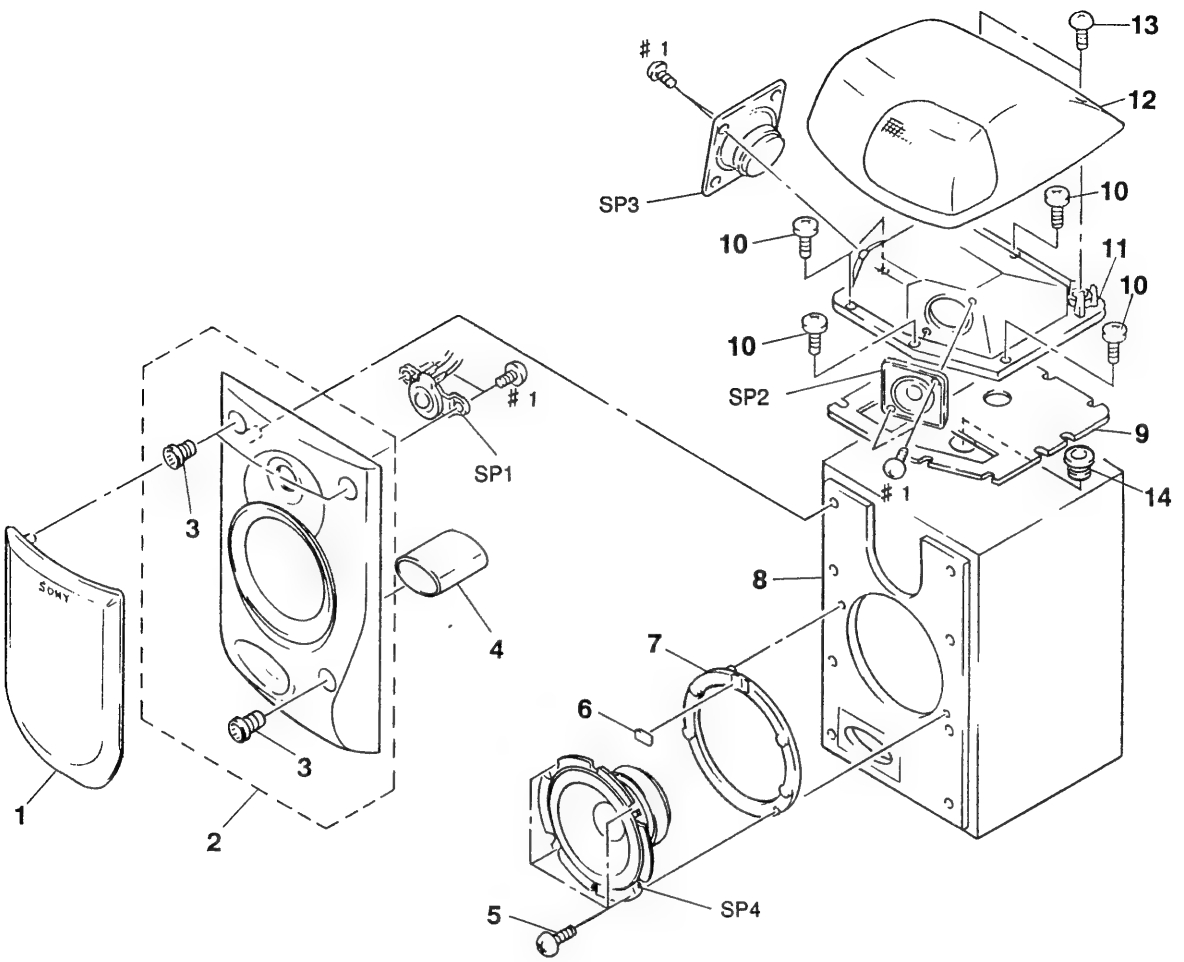

Ref. No.	Part No.	Description	Remark
1	X-4944-084-2	FRAME (L) ASSY, GRILLE	
1	X-4944-085-2	FRAME (R) ASSY, GRILLE	
2	X-4944-082-2	PANEL (L) ASSY, FRONT	
2	X-4944-083-2	PANEL (R) ASSY, FRONT	
3	4-912-253-01	CATCHER	
* 4	4-961-855-01	DACT	
5	4-962-063-01	SCREW	
* 6	4-964-321-01	PACKING (F)	
* 7	X-4944-345-1	SPACER ASSY	
8	A-4353-583-A	CABINET (L) ASSY, SPEAKER	
8	A-4353-584-A	CABINET (R) ASSY, SPEAKER	
* 9	4-961-857-03	PACKING (B) (RCH)	
* 9	4-964-320-01	PACKING (D) (LCH)	
10	4-914-518-11	SCREW (4×14), (+)(B) TAPPING	
* 11	4-961-852-01	UNIT BASE (L)	
* 11	4-961-853-01	UNIT BASE (R)	
12	X-4944-086-1	COVER (L) ASSY	
12	X-4944-087-1	COVER (R) ASSY	
13	4-929-125-11	SCREW (M4×16), TAPPING	
14	4-886-220-00	CATCHER	

Ref. No.	Part No.	Description	Remark
SP1	1-504-430-11	SPEAKER (2.5CM)	
SP2	1-504-429-11	SPEAKER (6CM)	
SP3	1-504-428-11	SPEAKER (8CM)	
SP4	1-504-416-11	SPEAKER (15W008AV)	

****

ACCESSORIES AND PACKING MATERIALS
****

*	4-965-245-01	INDIVIDUAL CARTON (EXCEPT E)	
*	4-965-246-01	CUSHION (UPPER)	
*	4-965-247-01	CUSHION (LOWER)	

****

****
HARDWARE LIST
****

#1	7-685-659-79	SCREW +BV TP, 4X8 TYPE2	

9-959-592-11

Sony Corporation
Consumer A&V Products Company
Home A&V Products Div.

English
94E0975-1D
Printed in Japan

© 1994. 5

Published by Home A&V Products Div.
Quality Engineering Dept.

HCD-H5900

SERVICE MANUAL

AEP Model
UK Model
E Model
Australian Model
Tourist Model

HCD-H5900 is the tuner CD player section in the HiFi component system MHC-5900/E90X.

Model Name Using Similar Mechanism	HCD-H4900
CD Mechanism Type	CDM14M-5BD1
Base Unit Name	BU-5BD1

SPECIFICATIONS

CD player section

System: Compact disc digital audio system
Laser: Semiconductor laser
Wavelength: 780 – 790 nm
Frequency response: 2 Hz – 20 kHz
Signal-to-noise ratio: More than 95 dB
Dynamic range: More than 90 dB
Dimensions: Approx. 225 x 80 x 265 mm (w/h/d) (8 7/8 x 3 1/4 x 10 1/2 inches)
Mass: Approx. 2.2 kg (4 lb 14 oz)

Tuner section

FM stereo, FM/AM superheterodyne tuner

FM tuner section

Tuning range: 87.5 – 108.0 MHz
Antenna terminals: 75 ohm unbalanced
Intermediate frequency: 10.7 MHz

AM tuner section

AEP, UK models:
Tuning range
UK and European models (except Germany and Italy):
MW: 531 – 1,602 kHz
LW: 153 – 279 kHz
German and Italian models:
AM: 531 – 1,602 kHz
EXCEPT AEP, UK models:
Tuning range
MW: 531 – 1,602 kHz (With the MW tuning interval set at 9 kHz)
SW: 5.95 – 17.90 MHz
Aerial: AM loop aerial, External aerial terminals
Intermediate frequency: 450 kHz

TUNER CD PLAYER

SONY®

Laser component in this product is capable of emitting radiation exceeding the limit for Class 1.

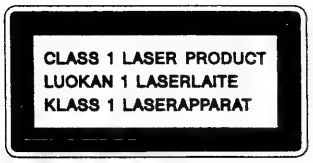

This appliance is classified as a CLASS 1 LASER product. The CLASS 1 LASER PRODUCT MARKING is located on the rear exterior.

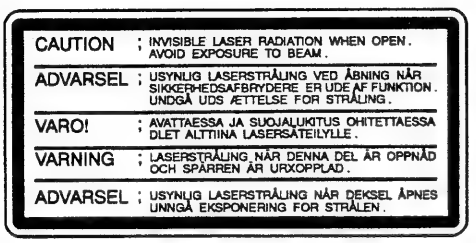

This caution label is located inside the unit.

CAUTION

Use of controls or adjustments or performance of procedures other than those specified herein may result in hazardous radiation exposure.

MODEL IDENTIFICATION

—BACK PANEL—

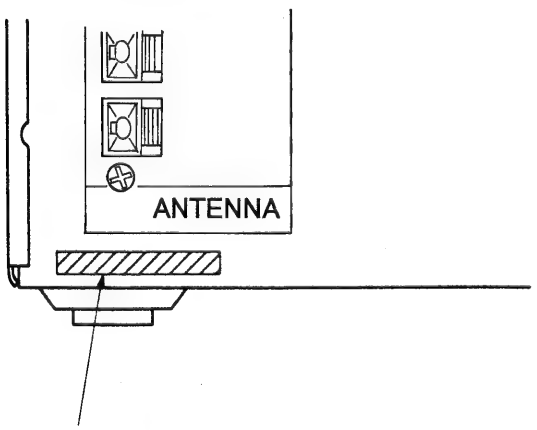

4-961-887-61 AE: AEP model
4-961-887-71 UK: UK model
4-961-887-81 E : Except AEP, UK model

SAFETY-RELATED COMPONENT WARNING!!

COMPONENTS IDENTIFIED BY MARK ⚠ OR DOTTED LINE WITH MARK ⚠ ON THE SCHEMATIC DIAGRAMS AND IN THE PARTS LIST ARE CRITICAL TO SAFE OPERATION. REPLACE THESE COMPONENTS WITH SONY PARTS WHOSE PART NUMBERS APPEAR AS SHOWN IN THIS MANUAL OR IN SUPPLEMENTS PUBLISHED BY SONY.

TABLE OF CONTENTS

Section	*Title*	*Page*
	Specifications	1
	Model Identification	2
	Servicing Notes	3
1.	**GENERAL**	
	Index to Parts and Controls	4
2.	**ELECTRICAL ADJUSTMENTS**	
	CD Section	5
	Tuner Section	6
3.	**DIAGRAMS**	
3-1.	Main Section Printed Wiring Boards	10
3-2.	Main Section Schematic Diagram	13
3-3.	Panel Section Schematic Diagram	18
3-4.	AEP, UK Models Tuner Section Printed Wiring Boards and Schematic Diagram	23
3-5.	Other Models Tuner Section Printed Wiring Boards and Schematic Diagram	27
3-6.	Main Section Block Diagram	31
3-7.	AEP, UK Models Tuner Section Block Diagram	33
3-8.	Other Models Tuner Section Block Diagram	35
3-9.	IC Pin Description	37
4.	**EXPLODED VIEWS**	41
5.	**ELECTRICAL PARTS LIST**	44

SERVICING NOTES

NOTES ON HANDLING THE OPTICAL PICK-UP BLOCK OR BASE UNIT

The laser diode in the optical pick-up block may suffer electrostatic breakdown because of the potential difference generated by the charged electrostatic load, etc. on clothing and the human body.
During repair, pay attention to electrostatic breakdown and also use the procedure in the printed matter which is included in the repair parts.
The flexible board is easily damaged and should be handled with care.

NOTES ON LASER DIODE EMISSION CHECK

The laser beam on this model is concentrated so as to be focused on the disc reflective surface by the objective lens in the optical pick-up block. Therefore, when checking the laser diode emission, observe from more than 30 cm away from the objective lens.

LASER DIODE AND FOCUS SEARCH OPERATION CHECK

1. Make POWER switch on with no disc inserted and disc table closed.
2. Confirm that the following operation is performed while observing the objective lens.

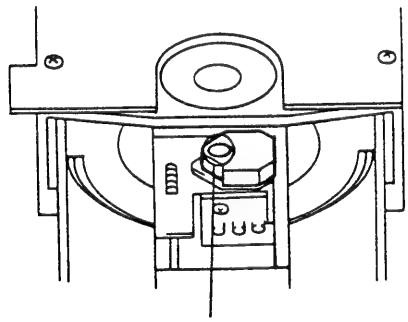

- Confirm that laser beam is spread.
- Up and down motion of the objective lens. (3 times)

Flexible Circuit Board Repairing

- Keep the temperature of the soldering iron around 270℃ during repairing.
- Do not touch the soldering iron on the same conductor of the circuit board (within 3 times).
- Be careful not to apply force on the conductor when soldering or unsoldering.

Notes on chip component replacement

- Never reuse a disconnected chip component.
- Notice that the minus side of a tantalum capacitor may be damaged by heat.

• POWER SUPPLY FOR SERVICING

This set does not have its own power unit. It is operated by power supply from the amplifier (TA-H5900) used in this series. Therefore, when performing service such as continuity repair, connect the set with the amplifier (TA-H5900).

• HOW TO FORCEFULLY TURN POWER ON

The equipment is not provided with any power switch. Therefore, power ON/OFF is controlled in the amplifier side. However, even without an amplifier, power is supplyable to the equipment according to the following methods provided any type of power is available, e.g. using a special jig or supplying the 4 types of voltages individually.

- To activate the compact disc unit, simultaneously press " □ " switch and "CONTINUE" switch. (The tuner unit will stop its function.)
- To activate the tuner unit, simultaneously press "BAND" switch and "PROGRAM" switch. (The CD unit will stop its function.)

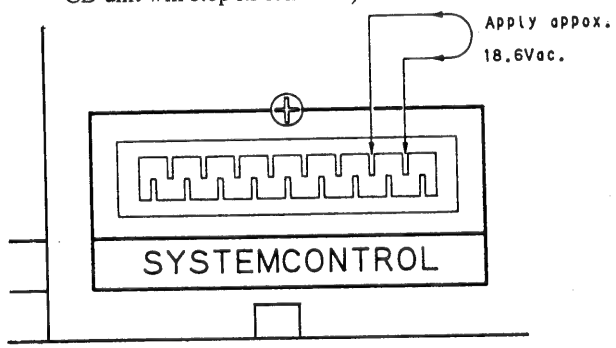

[Connection with the connector on "CDP/TC" unit of the jig (PFJ-1) for CDP-H4600, H6600) allows power supply to the set.]

• SERVICE MODE FOR FL TUBE CHECK

By pressing "SHUFFLE" switch and " ▷▯▯ " switch at the same time, the FL display tube is totally lit.

• VOLTAGE MEASUREMENT OF THE TUNER/ TCB015 BOARD

When performing voltage measurement of the TCB015 board, prepare the following jigs (extension cables):

1) Extension cable for 4-pin application (J-8000-026-A) × 3 lines.
2) Extension cables for 11-pin application (J-8000-027-A) × 1 lines.

SECTION 1
GENERAL

This section is extracted from instruction manual.

Index to Parts and Controls

Refer to the pages indicated in parentheses for details on how to use the controls. Controls with an asterisk have indicators on themselves.

Front Panel

Tuner section

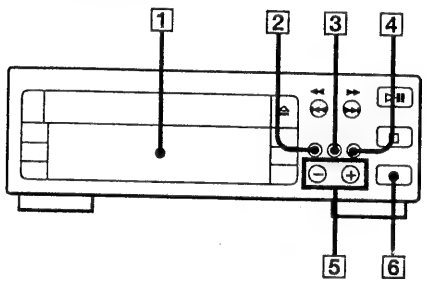

[1] Display window (7, 11)
[2] STEREO/MONO button (11)
[3] MODE button (11)
[4] MEMORY button (12)
[5] –/+ buttons (11)
[6] BAND button (11)

CD player section

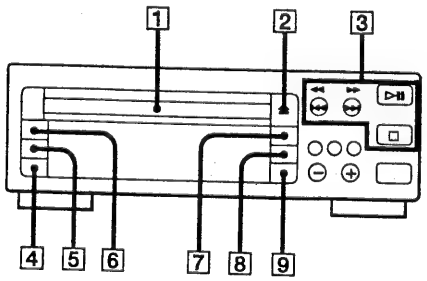

[1] Disc tray (7)
[2] ⏏ OPEN/CLOSE (open/close of the disc tray) (7, 14)
[3] CD player operating buttons
⏮ ◀◀ / ▶▶ ⏭ (manual search/AMS) (8)
▷II (play/pause) (7, 14)
□ (stop) (7, 14)
[4] PROGRAM button (9)
[5] SHUFFLE button (8)
[6] CONTINUE button (8)
[7] EDIT button (16)
[8] REPEAT button (10)
[9] TIME button (8)

Display Window

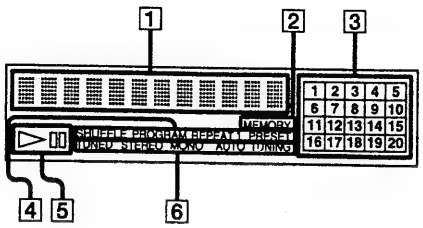

[1] Frequency/playing time indication (7, 11)
[2] MEMORY indication (12)
[3] Music calendar/preset radio station numbers (7, 12)
[4] CD play mode indication (8)

Remote commander

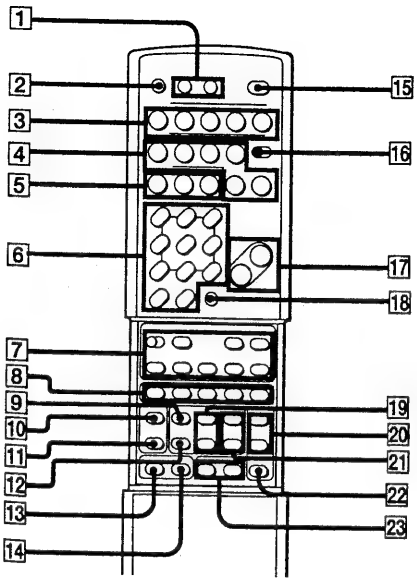

[1] TAPE DECK A/B buttons (13)
[2] SLEEP button (24)
[3] CD/MD operating buttons (7)
[4] Cassette deck operating buttons (13)
[5] Tuner operating buttons (11)
[6] CD/Tuner/numeric buttons (7, 12)
[7] VCR operating buttons (28)
[8] TV operating buttons (28)
[9] PRO LOGIC button (23)
[10] AUDIO FUNCTION button (27, 28)
[11] VIDEO FUNCTION button (28)
[12] TEST TONE button (23)
[13] CHECK button (9)
[14] CLEAR button (9)
[15] SYSTEM POWER switch (7)
[16] CD/MD switch (7)
[17] VOLUME +/– buttons (7, 20)
[18] MUTING button (20)
[19] REAR LEVEL +/– buttons (23)
[20] MENU 1, 2 button (21)
[21] CENTER LEVEL +/– buttons (23)
[22] DIRECT button (14, 21)
[23] BALANCE L/R button (20)

SECTION 2
ELECTRICAL ADJUSTMENTS

CD SECTION

Note :

1. CD Block is basically designed to operate without adjustment. Therefore, check each item in order given.
2. Use YEDS-18 disc (3-702-101-01) unless otherwise indicated.
3. Use the oscilloscope with more than 10MΩ impedance.
4. Clean the object lens using an applicator with neutral detergent when the signal level is low than specified value with the following checks.

S Curve Check

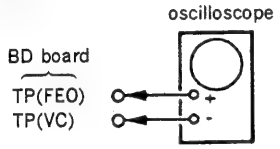

Procedure :

1. Connect oscilloscope to test point TP (FEO) on BD board.
2. Connect between test point TP (FES) and TP (VC) by lead wire.
3. Turned Power switch on.
4. Put disc (YEDS-18) in and turn Power switch on again and acturate the focus search. (actuate the focus search when disc table is moving in and out.)
5. Check if the oscilloscope waveform (S curve) is symmetrical between A and B. And confirm peak to peak level within 3 ± 1Vp-p.

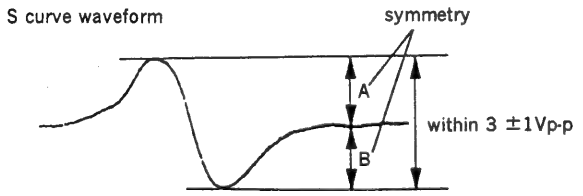

6. After check, remove the lead wire connected in step 2.

Note: • Try to measure several times to make sure that the ratio of A : B or B : A is more than 10 : 7.
• Set sweep time as long as possible and set the brightness to obtain best waveform.

RF Level Check

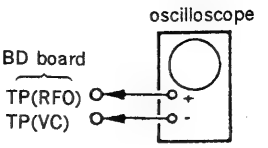

Procedure :

1. Connect oscilloscope to test point TP (RFO) on BD board.
2. Turn Power switch on.
3. Put disc (YEDS-18) in and playback.
4. Confirm that oscilloscope waveform is clear and check RF signal level is correct or not.

Note :

A clear RF signal waveform means that the shape "◇" can be clearly distinguished at the center of the waveform.

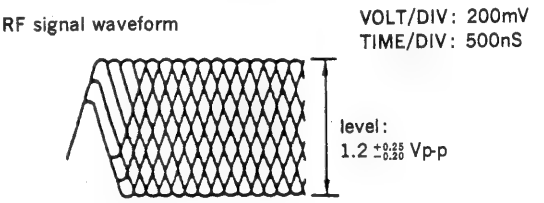

E-F Balance Check

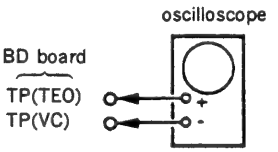

Procedure :

1. Connect test point TP (ADJ) to ground and TP (TES) to TP (VC) with a lead wire.
2. Connect oscilloscope to test point TP (TEO) on BD board.
3. Turn Power switch on.
4. Put disc (YEDS-18) in and playback.
5. Confirm that the osilloscope waveform is symmetrical on the top and bottom in relation to 0V, and check this level.

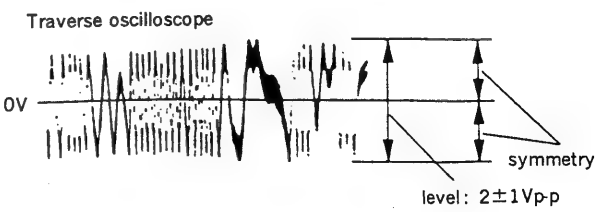

6. Remove the lead wire connected in step 1.

RF PLL Free-run Frequency Check

Procedure :

1. Connect frequency counter to test point (PCK) with lead wire.

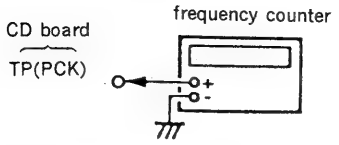

2. Turn Power switch on.
3. Confirm that reading on frequency counter is 4.3218MHz.

Focus/Tracking Gain

This gain has a margin, so even if it is slightly off.
There is no problem.
Therefore, do not perform, this adjustment.
Please note that it should be fixed to mechanical center position when you moved and do not know original position.

TUNER SECTION

Precautions in Repairing

If the front end unit fails, it is difficult to repair the inner circuits, so replace the entire front end unit.

• FM SECTION

FM Discriminator Adjustment (NULL Adjustment)

Setting :

BAND : FM

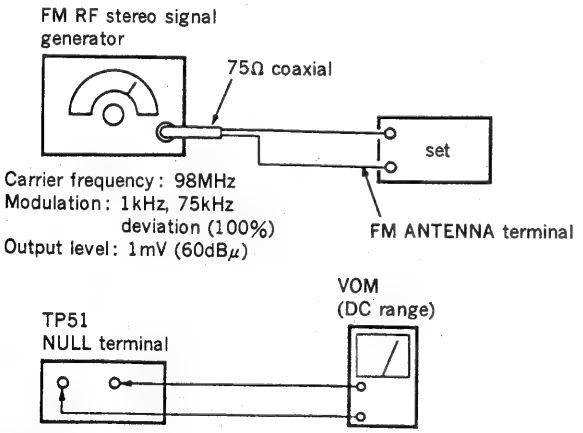

Procedure :

1. Tune the set to 98MHz.
2. Adjust IFT51 for 0V reading on the VOM.

Note : FM Tuning Level adjustment should be made after FM discriminator alignment.

FM Tuning Level Adjustment

Setting :

BAND : FM

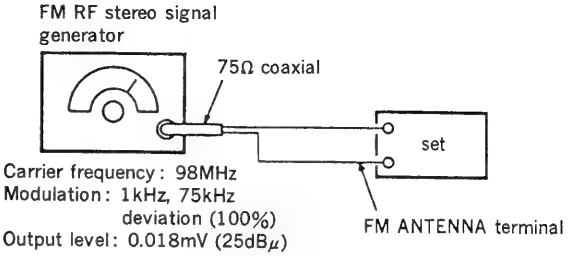

Procedure :

1. Tune the set to 98MHz.
2. Adjust RV52 so that the TUNED indicator goes on.

• AM SECTION

AM Tuning Level Adjustment

Setting :

BAND : MW

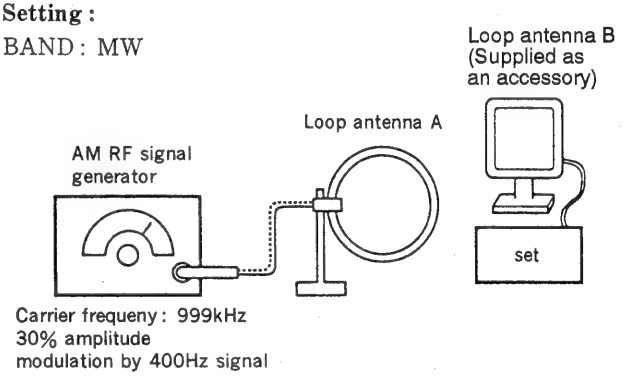

Procedure :

1. Set loop antenna A so that the loop antenna B input level becomes 58dBμ/m (0.8m V/m)
2. Tune the set to 999kHz.
3. Adjust the RV51 so that the TUNED indicator goes on.

• SW SECTION (EXCEPT AEP, UK MODEL)

SW OSC Voltage Adjustment

Setting :

BAND : SW

Procedure :

1. Connect digital voltmeter to front end FE1 pin ⑤ (VT) and ground.
2. Adjust for a following value reading on digital voltmeter.

Set frequency	Adjustment part	Reading on digital voltmeter
f min. 5.95MHz	T2	0.9 to 1.1V
f max. 17.9MHz	CV2	8.3 to 8.7V

SW Tracking Adjustment

Setting :

BAND : SW

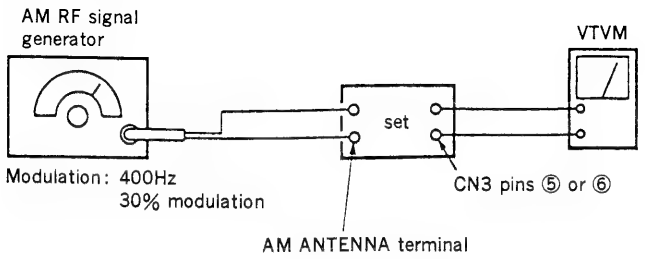

Adjust for a maximum reading on VTVM.	
7MHz	T1
17MHz	CV1

Adjustment Location :

【BD Board】 —Conductor Side—

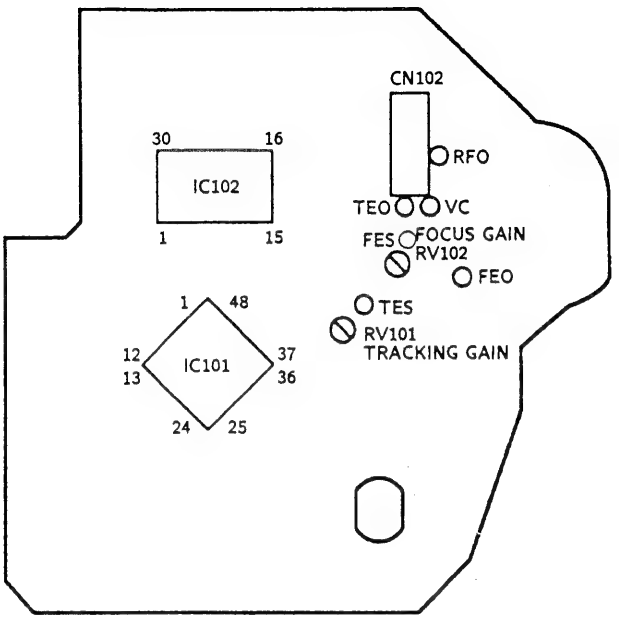

【MAIN Board】 – Conductor Side –

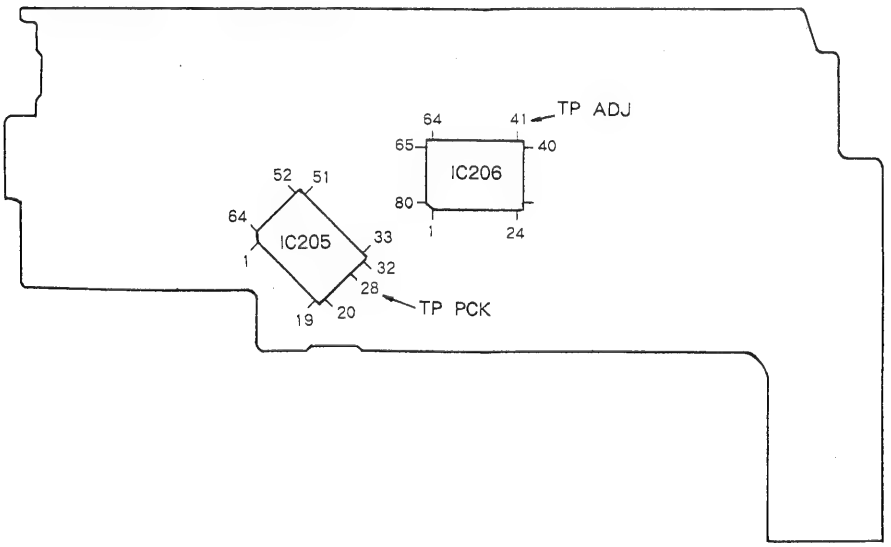

SECTION 3
DIAGRAMS

- **IC Block Diagrams**

IC21 LC7218M

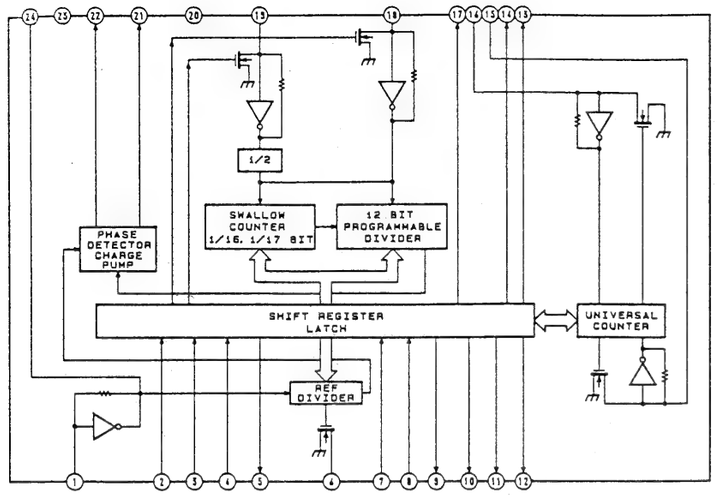

IC51 LA1851NM

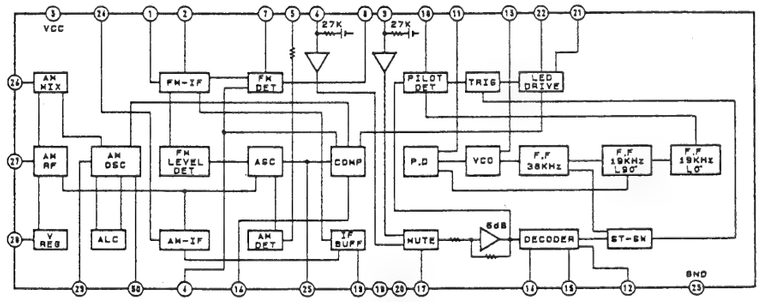

IC101 CXA1372AQ

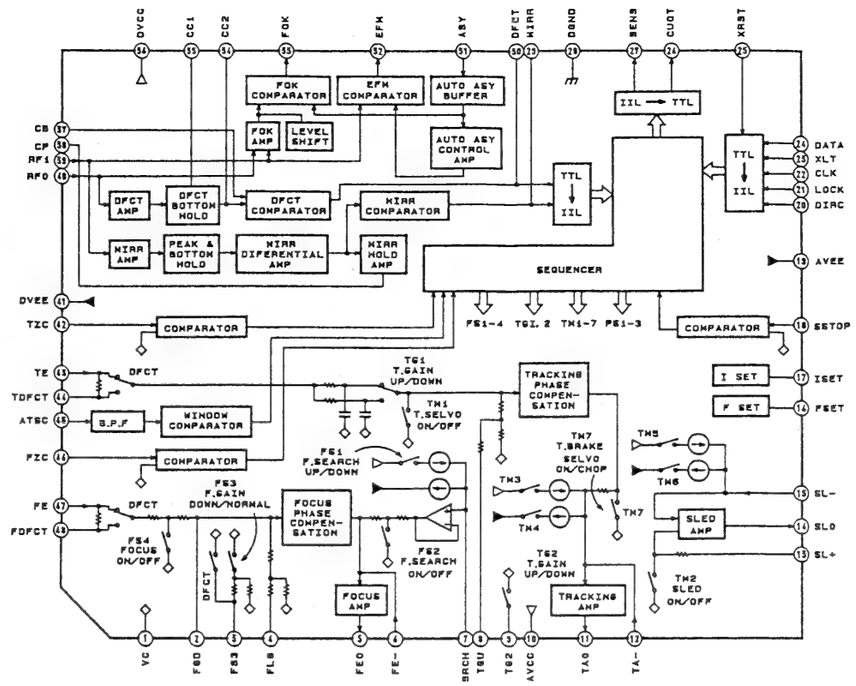

IC102 LA6532M

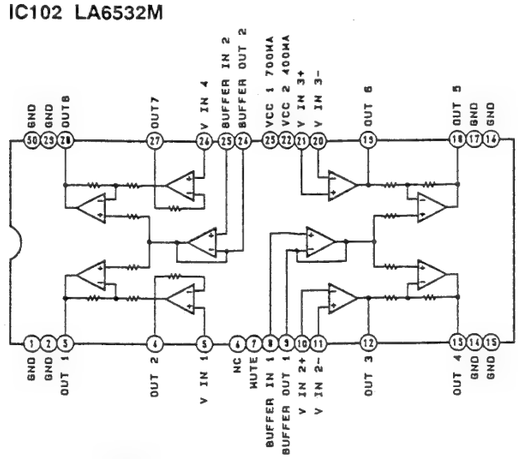

IC201 M5290FP

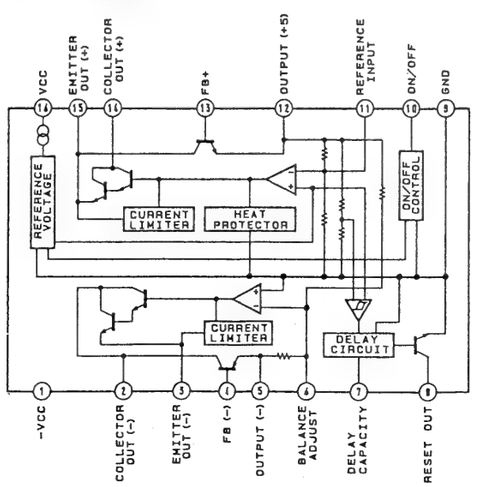

IC203 L78MR05

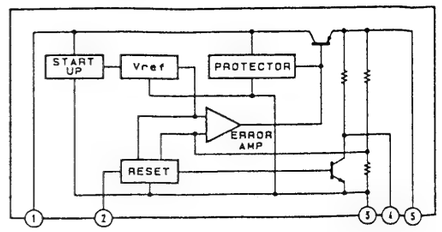

IC206 CXD2500BQ

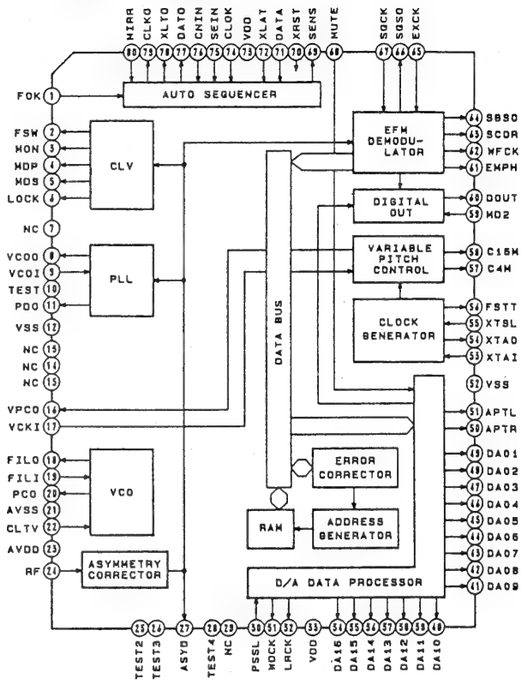

IC208 CXD2561BM

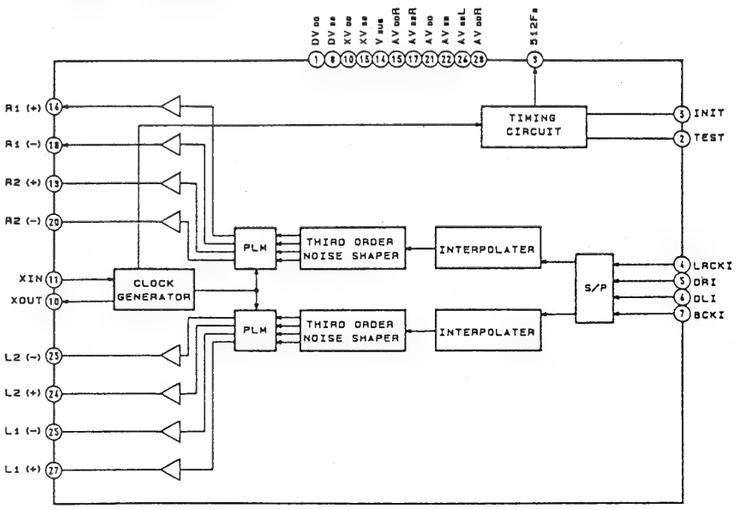

3-1. MAIN SECTION PRINTED WIRING BOARDS

• **Semiconductor Lead Layouts**

μPC2407HF

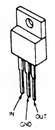

2SB1094-LK
2SD2012

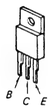

MA8056

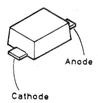

1SS352

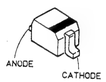

• **Semiconductor Location**

Ref. No.	Location
D101 (BD)	F-3
D101	D-8
D102	B-15
D103	C-15
D104	B-10
D105	B-11
D110	B-14
D201	F-16
D202	E-15
D203	E-15
D204	E-15
D206	D-10
D801	I-16
D802	I-16
D803	I-15
D804	I-15
D805	I-15
IC101 (BD)	I-2
IC102 (BD)	H-2
IC102	B-13
IC103 (BD)	F-2
IC104	C-9
IC106	B-9
IC201	D-15
IC202	F-13
IC203	B-15
IC205	C-11
IC206	C-12
IC207	D-13
IC208	C-14
IC209	B-12
IC212	E-16
IC601	G-6
Q101 (BD)	I-3
Q101	B-11
Q102	B-11
Q103	C-15
Q104	C-15
Q105	C-15
Q106	B-11
Q107	A-10
Q108	A-10
Q109	D-9
Q115	C-15
Q201	F-12
Q202	C-15
Q205	D-9
Q208	B-12
Q209	B-12
Q210	B-13
Q211	B-13
Q603	F-6
Q801	I-15

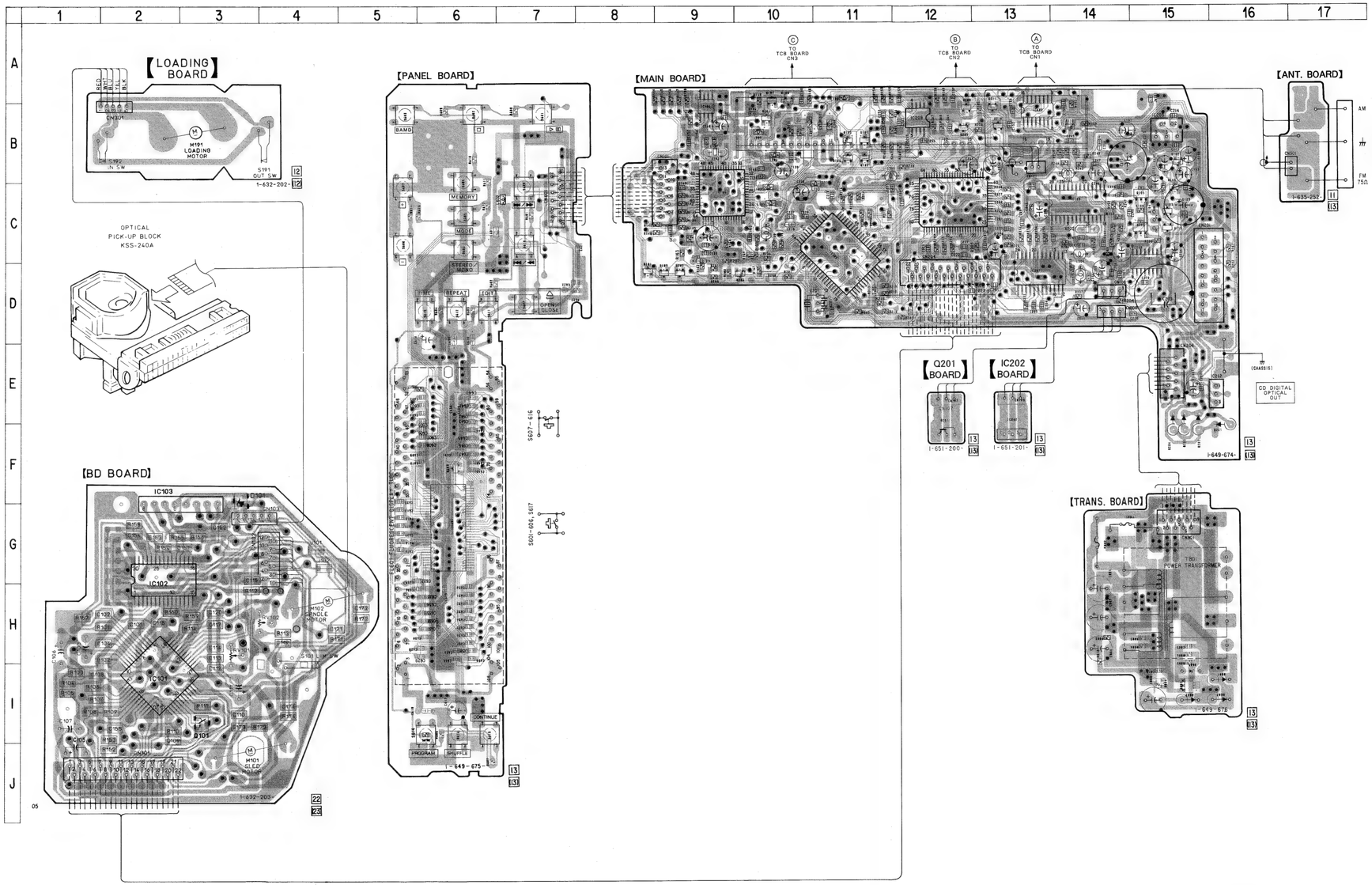

Note:
- ○—— : parts extracted from the component side.
- ● : Through hole.
- ▨ : Pattern of the rear side.
- ▩ : Pattern from the side which enables seeing.

3-2. MAIN SECTION SCHEMATIC DIAGRAM • See pages 8 and 9 for IC Block Diagrams, page 18 for Waveforms.

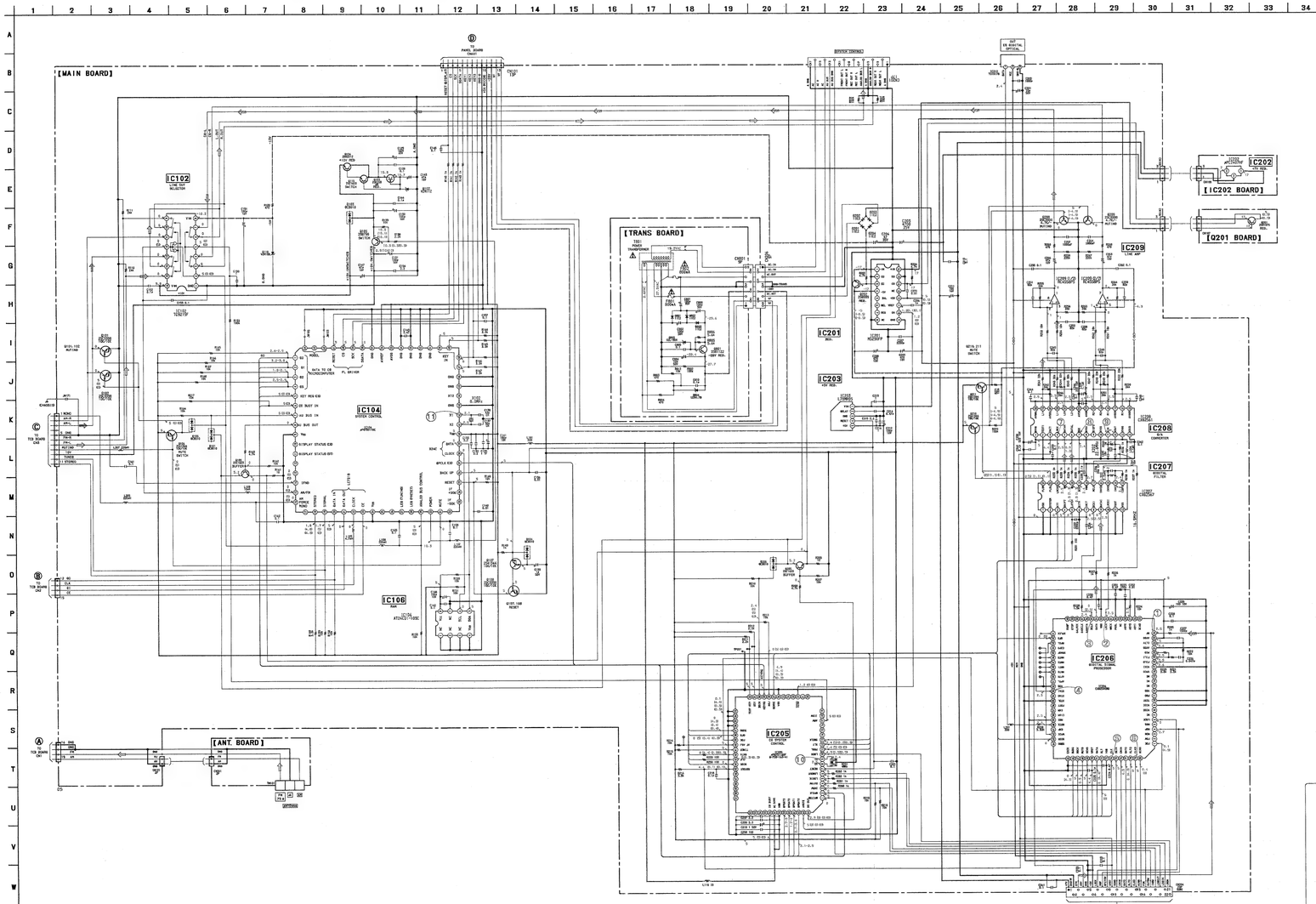

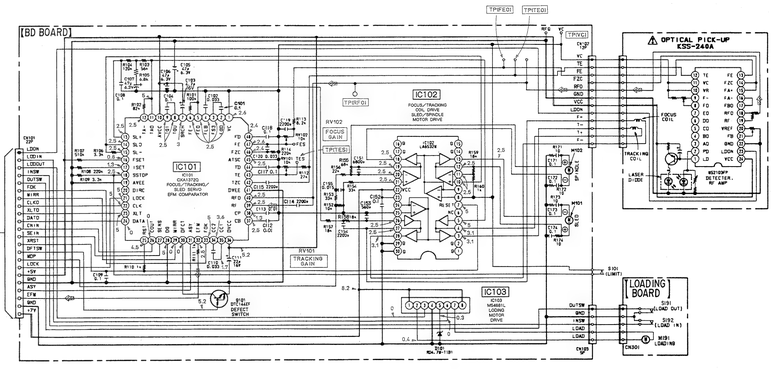

Note:

- All capacitors are in μF unless otherwise noted. pF: μF 50 WV or less are not indicated except for electrolytics and tantalums.
- All resistors are in Ω and ¼ W or less unless otherwise specified.

Note: The components identified by mark ⚠ or dotted line with mark ⚠ are critical for safety.
Replace only with part number specified.

- : B + Line.
- : B − Line.
- : panel designation.
- : adjustment for repair.
- Power voltage is fed with TA-H5900 from CN201 SYSTEM CONTROL.
- Voltages and waveforms are dc with respect to ground under no-signal (detuned) conditions.
  no mark : CD stop (Common)
  ( ) : FM
  (( )) : AM
  [ ] : CD PLAY
  ✻ : Impossible to measure
- Voltages are taken with a VOM (10 MΩ/V).
  Voltage variations may be noted due to normal production tolerances.
- Waveforms are taken with a oscilloscope.
  Voltage variations may be noted due to normal production tolerances.
- Circled numbers refer to waveforms.
- Signal path.
  ▭▷ : CD

• Circuit Boards Location

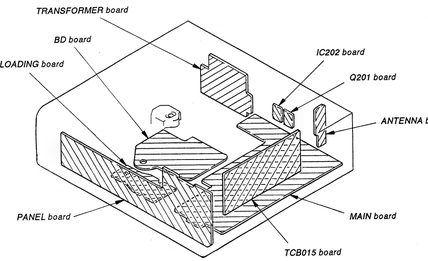

3-3. PANEL SECTION SCHEMATIC DIAGRAM • See pages 8 and 9 for IC Block Diagrams.

• Waveforms

❶ IC206㉔ 1V/DIV 2 µs/DIV

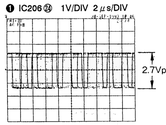

❷ IC206㉒

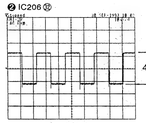

❸ IC206㉓

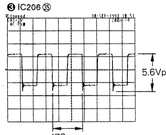

❹ IC206㉑

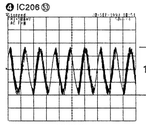

❺ IC206㉖ 2V/DIV 10msec/DIV

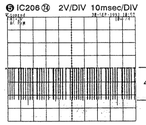

❻ IC208⑦

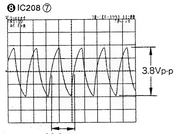

❼ IC208④

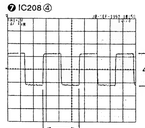

❽ IC208⑪

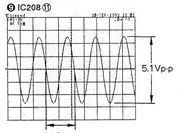

❾ IC205③

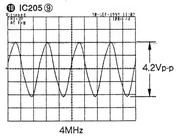

❿ IC104㊷

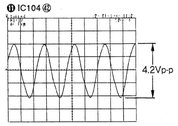

⓫ IC206㉕ 2V/DIV 10msec/DIV

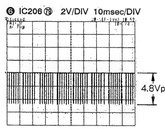

【PANEL BOARD】

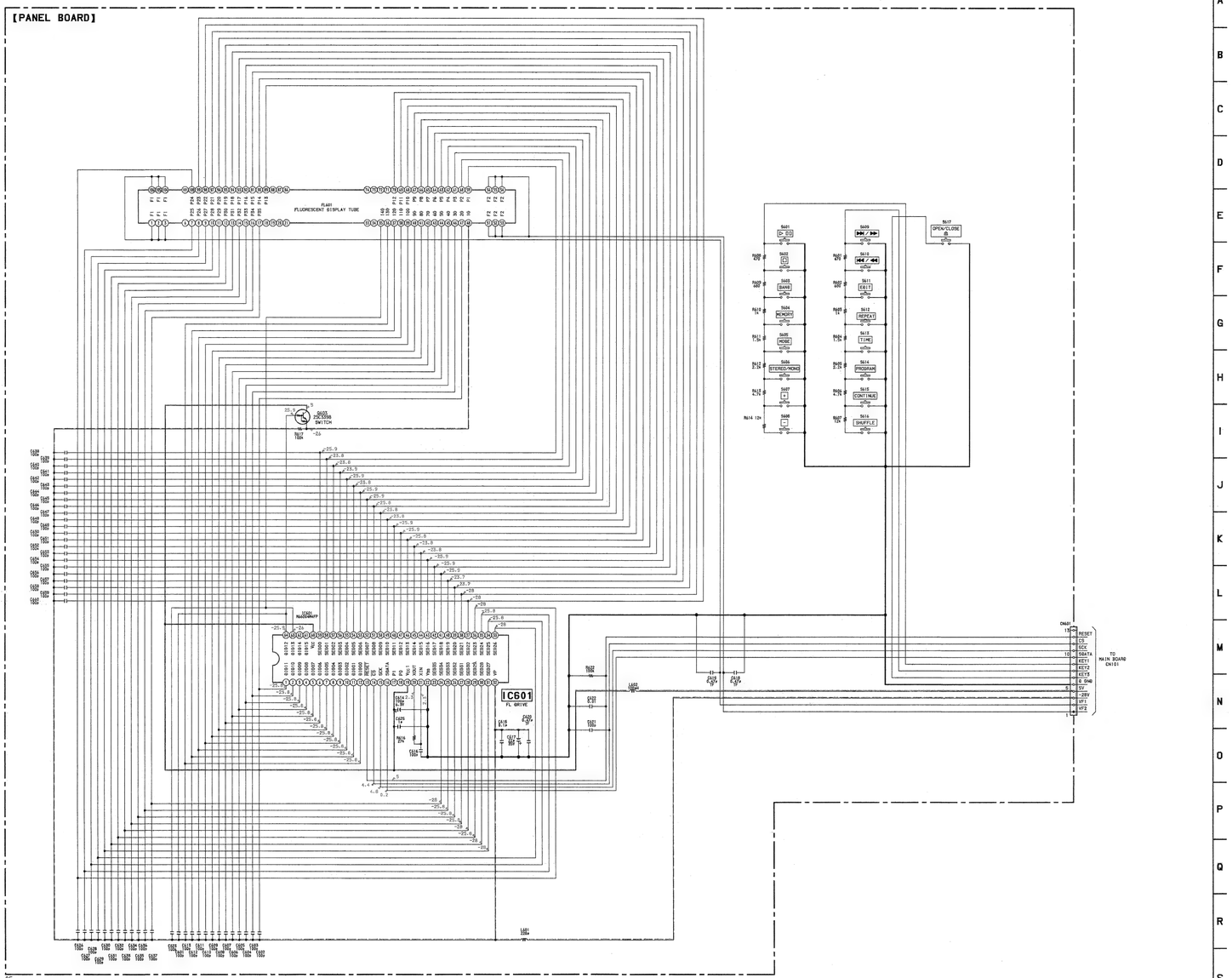

05

Note:

- All capacitors are in µF unless otherwise noted. pF: µµF 50 WV or less are not indicated except for electrolytics and tantalums.
- All resistors are in Ω and ¼ W or less unless otherwise specified.
- △ : internal component.
- ○ ═══ : B + Line.
- ○ ═══ : B − Line.
- ▭ : panel designation.
- ○ Power voltage is fed with TA-H5900 from CN201 SYSTEM CONTROL.
- ○ Voltages and waveforms are dc with respect to ground under no-signal (detuned) conditions.
  no mark : CD stop
- ○ Voltages are taken with a VOM (10 MΩ/V).
  Voltage variations may be noted due to normal production tolerances.

3-4. AEP, UK MODELS TUNER SECTION PRINTED WIRING BOARDS AND SCHEMATIC DIAGRAM

• See pages 8 and 9 for IC Block Diagrams.

• Semiconductor Location

Ref. No.	Location
D21	C-4
D51	D-2
IC21	C-5
IC51	C-3
Q1	A-3
Q3	B-4
Q4	D-5
Q5	C-7
Q6	C-6
Q7	C-7
Q21	B-4
Q22	B-6
Q23	B-6
Q51	C-2
Q52	C-1
Q53	B-2

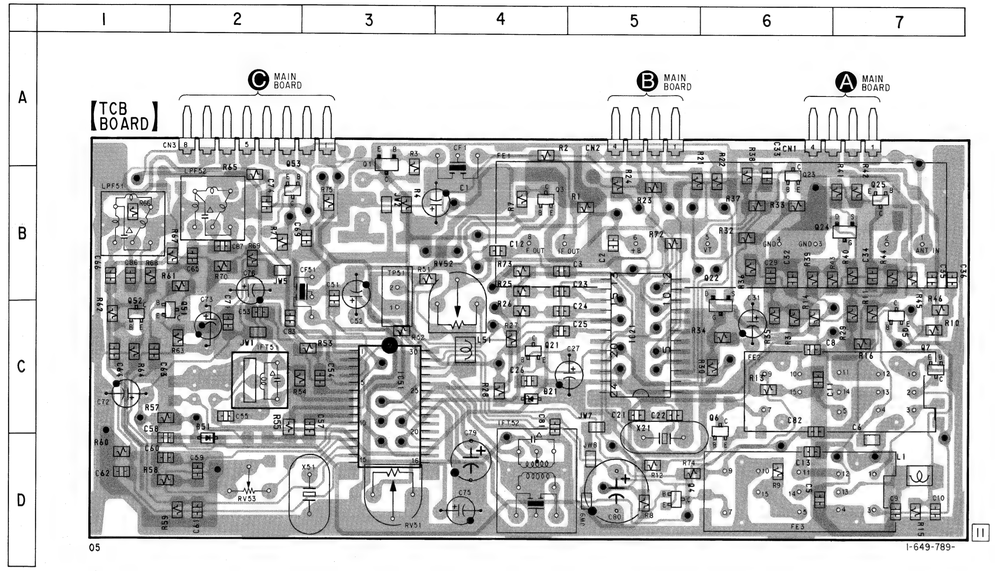

Note on Printed Wiring Board:

- ○——○ : parts extracted from the component side.
- ● : Through hole.
- ▒ : Pattern of the rear side.
- ▒ : Pattern from the side which enables seeing.

Note on Schematic Diagram:

- All capacitors are in μF unless otherwise noted. pF: μμF 50 WV or less are not indicated except for electrolytics and tantalums.
- All resistors are in Ω and ¼ W or less unless otherwise specified.
- △ : internal component.
- ▭ : B + Line.
- ▭ : adjustment for repair.
- Signal path.
  ⇨ : FM

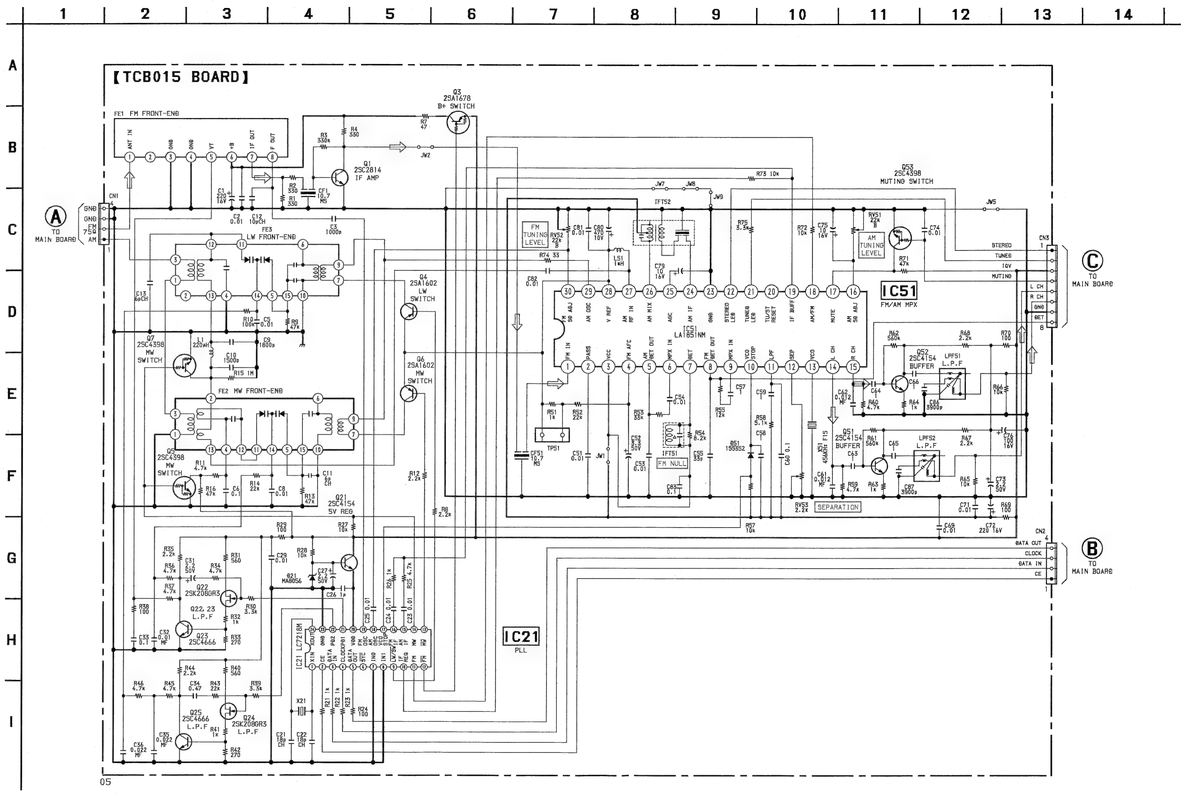

3-5. OTHER MODELS TUNER SECTION PRINTED WIRING BOARDS AND SCHEMATIC DIAGRAM

• See pages 8 and 9 for IC Block Diagrams.

• **Semiconductor Location**

Ref. No.	Location
D1	C-7
D21	C-4
D51	D-2
IC21	C-5
IC51	C-3
Q1	B-3
Q3	B-4
Q4	D-6
Q5	D-6
Q6	C-7
Q7	D-7
Q21	C-4
Q22	B-6
Q23	B-6
Q51	C-2
Q52	C-1
Q53	B-3

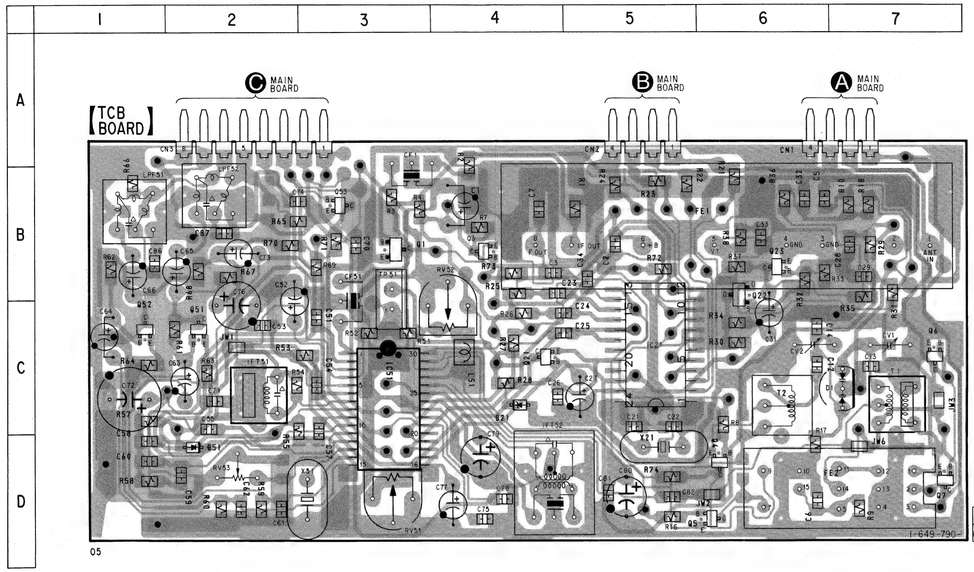

Note on Printed Wiring Board:

- ○——— : parts extracted from the component side.
- ● : Through hole.
- ▒▒▒ : Pattern of the rear side.
- ▒▒▒ : Pattern from the side which enables seeing.

Note on Schematic Diagram:

- All capacitors are in μF unless otherwise noted. pF: μμF
  50 WV or less are not indicated except for electrolytics and tantalums.
- All resistors are in Ω and ¼ W or less unless otherwise specified.
- △ : internal component.
- ▬▬ : B + Line.
- ▭ : adjustment for repair.
- Power voltage is fed with TA-H5900 from CN201 SYSTEM CONTROL.
- Voltages and waveforms are dc with respect to ground under no-signal (detuned) conditions.
  no mark : CD PLAY (Common)
  ( ) : FM
  [ ] : MW
  « » : LW
- Voltages are taken with a VOM (10 MΩ/V).
  Voltage variations may be noted due to normal production tolerances.
- Signal path.
  ⇨ : FM

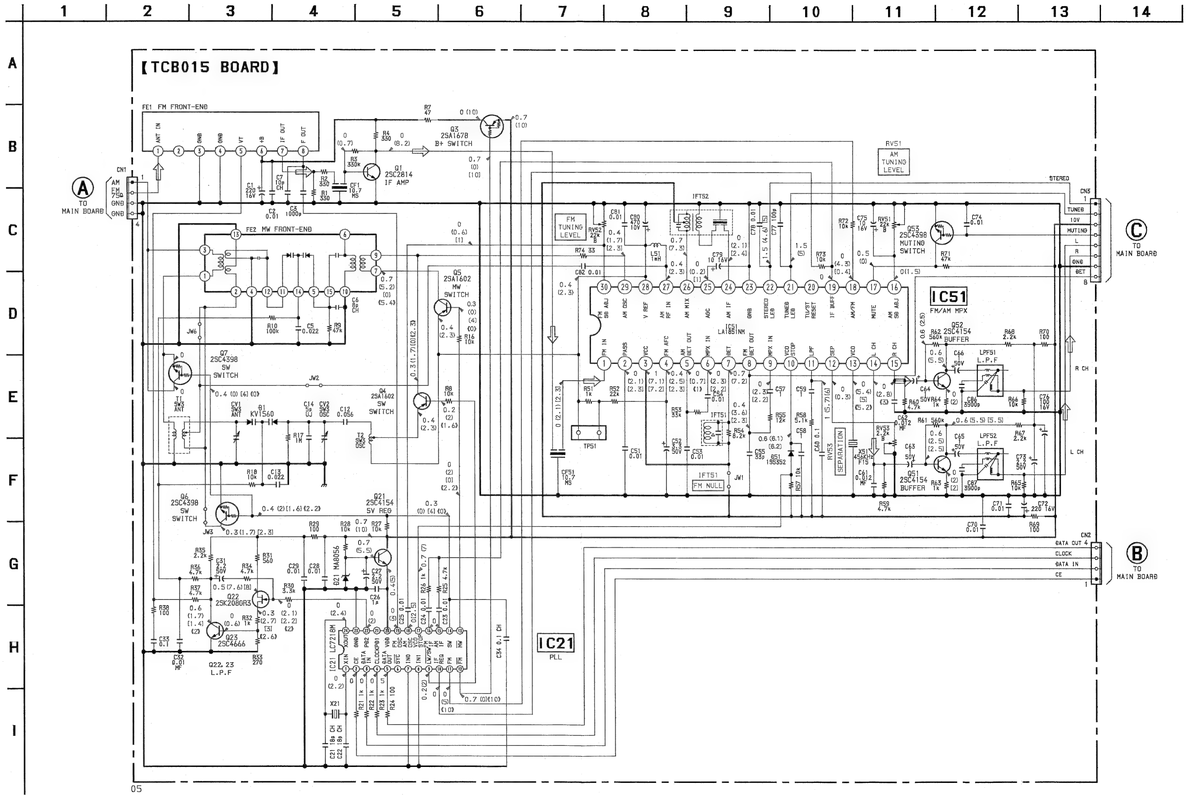

3-6. MAIN SECTION BLOCK DIAGRAM

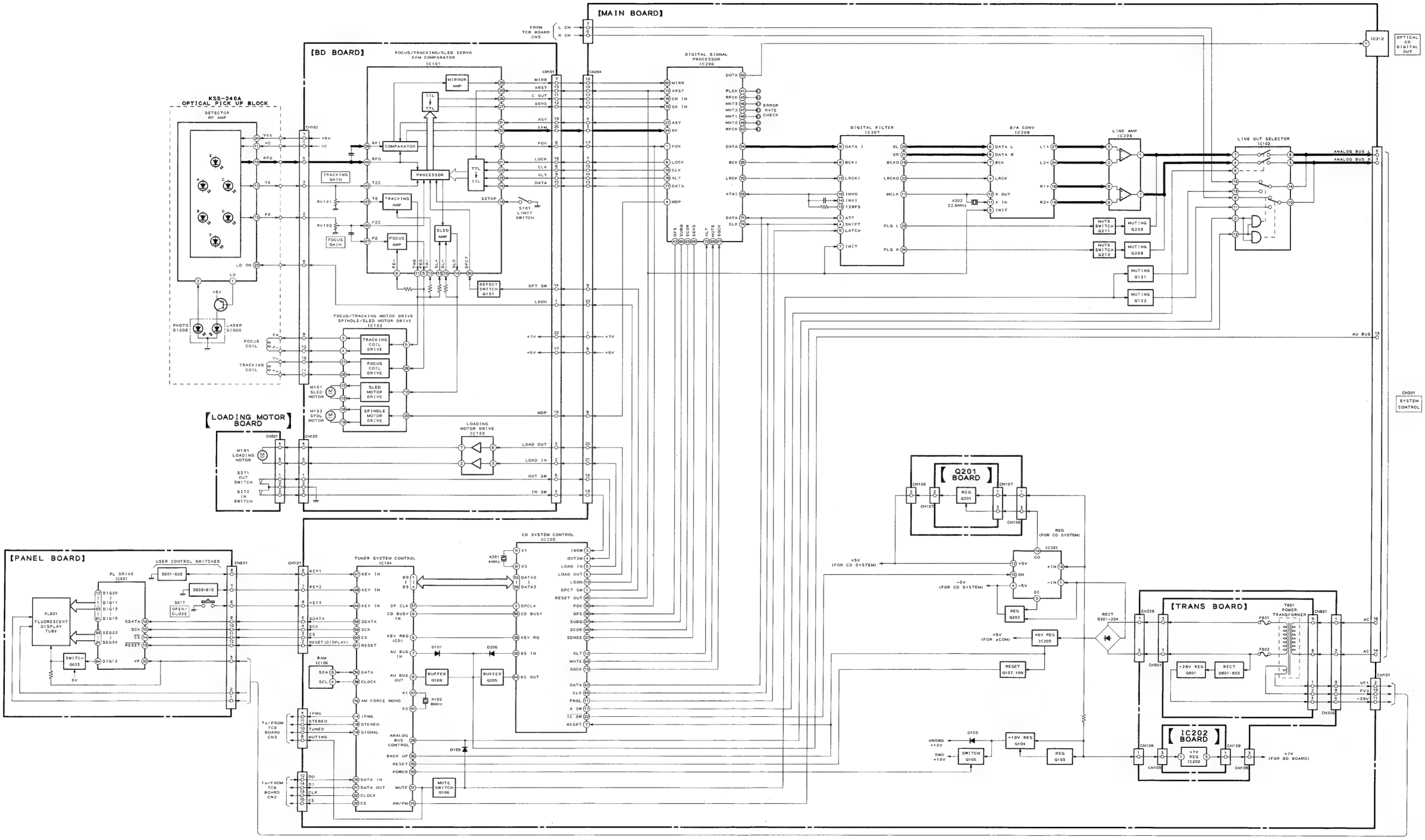

3-7. AEP, UK MODELS TUNER SECTION BLOCK DIAGRAM

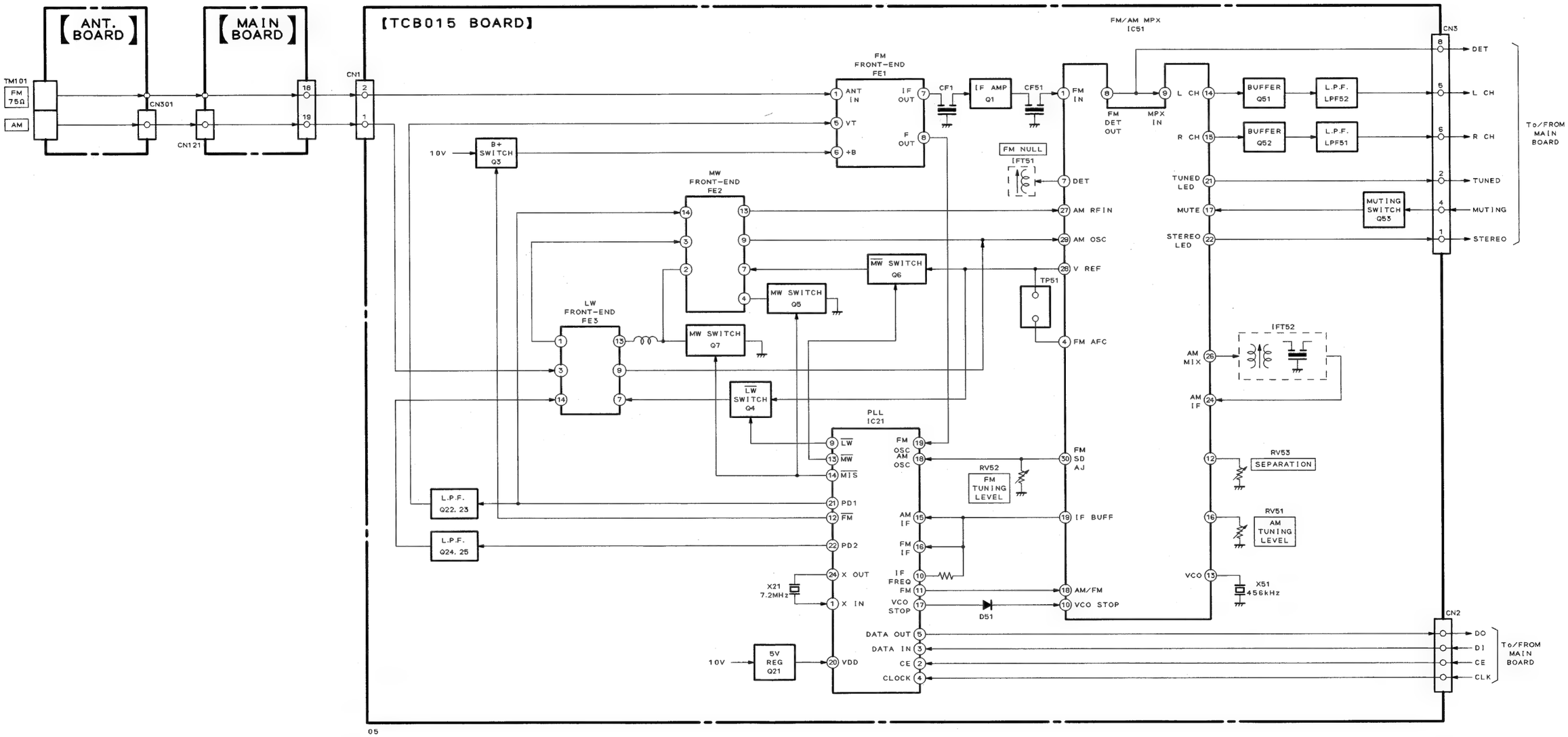

05

3-8. OTHER MODELS TUNER SECTION BLOCK DIAGRAM

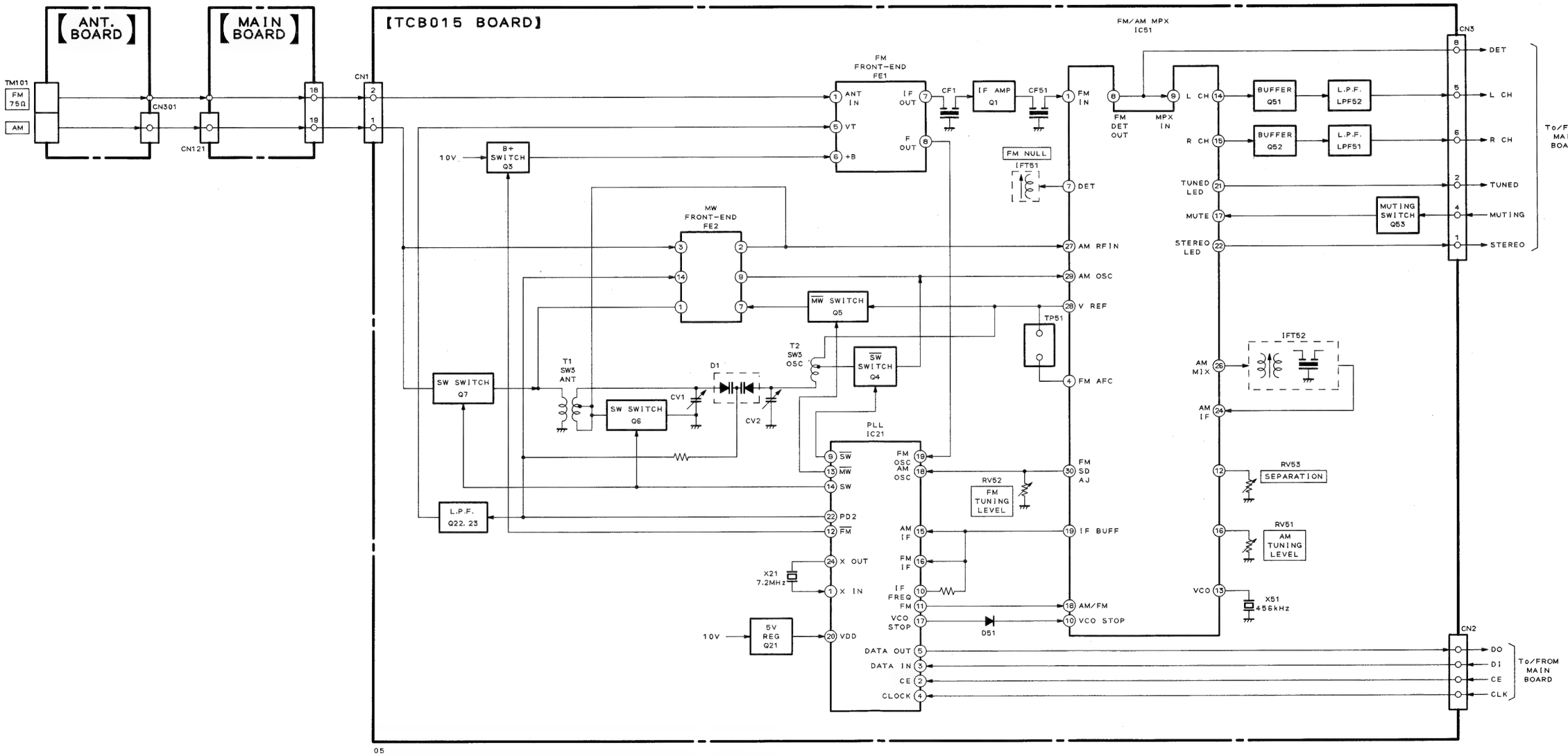

3-9. IC PIN DESCRIPTION

- IC104 tuner system controller (μPD78011GC-607-AB8)

Pin No.	Signal Name	I/O	Function
1	D0	I/O	Pin for data input/output from and to IC205 (CD system controller).
2	D1	I/O	Pin for data input/output from and to IC205 (CD system controller).
3	D2	I/O	Pin for data input/output from and to IC205 (CD system controller).
4	D3	I/O	Pin for data input/output from and to IC205 (CD system controller).
5	KEY REQ (CD)	O	Key data output timing. (CD)
6	CD BUSY Input	I	Input of CD state.
7	AU BUS Input	I	Audio bus input.
8	AU BUS Output	O	Audio bus output.
9	V_{SS}	—	Grounding pin.
10	Display Status (CD)	O	Not used in this set (open).
11	Display Status (ST)	O	Not used in this set (open).
12			Not used in this set (open).
13			Not used in this set (open).
14	IFOK	O	Not used in this set (open).
15	AM/FM	O	FM/AM changeover output. "L" for FM, "H" for AM.
16	AM Forced Monaural	O	Not used in this set (open).
17	AM	O	Not used in this set (open).
18	STEREO	I	STEREO input.
19	SIGNAL	I	SIGNAL input.
20	DATA Input	I	Data input from IC21 (PLL).
21	DATA Output	O	Data output to IC21 (PLL).
22	CLOCK	O	CLOCK output to IC21 (PLL).
23	CE	O	CE output to IC21 (PLL).
24	V_{SS}	—	Grounding pin.
25			Not used in this set (open).
26			Not used in this set (open).
27	LED (TUNING)	O	Tuner "+"/"−" key mode LED output.
28	LED (PRESET)	O	Tuner "+"/"−" key mode LED output.
29	Analog Bus Control	O	Analog bust control output to IC102 (TC9215F-TP1).
30	POWER	O	Power output. "L" for ON, "H" for OFF.
31	MUTE	O	Muting output. "L" for ON, "H" for OFF.
32			Not used in this set (open).
33	IF −50K	I	IF offset input.
34	IF +50K	I	IF offset input.
35	RESET	I	Reset input.
36	BACK UP	I	Backup input.
37	DPCLK (CD)	I	CD display data timing input.
38	CLOCK	O	CLOCK output to IC106 (MEMORY).
39	DATA	I/O	Data input/output from and to IC106 (MEMORY).
40	V_{DD}	—	Power pin (+5V).
41	X2		Main clock.
42	X1	I	Main clock (8.38MHz).
43	GND	—	Grounding pin.

Pin No.	Signal Name	I/O	Function
44	XT2	—	Not used in this set (open).
45	GND	—	Grounding pin.
46	GND	—	Grounding pin.
47	Key Input	I	Key input.
48	Key Input	I	Key input.
49	Key Input	I	Not used in this set (+5V).
50	Key Input	I	Not used in this set (+5V).
51	GND	—	Grounding pin.
52	GND	—	Grounding pin.
53	GND	—	Grounding pin.
54	GND	—	Grounding pin.
55	AV_{DD}	—	Power pin (+5V).
56	AV_{REF}	—	Power pin (+5V).
57	GND	—	Grounding pin.
58	SDATA	O	Data output to IC601 (FL driver).
59	SCK	O	CLOCK output to IC601 (FL driver).
60	CS	O	CS output to IC601 (FL driver).
61	RESET	O	Reset output to IC601 (FL driver).
62	Destination	I	Destination discrimination input
63	Destination	I	Destination discrimination input
64	Destination	I	Destination discrimination input

● IC205 CD system controller (μPD75116GF-G38-3BE)

This controller provides control of the CD unit IC101 (RF signal processing, servo), IC102 (DSP, digital filter) and loading, data exchange with IC104 (system controller), and audio bus input.

Pin No.	Signal Name	I/O	Function
1	DFCTSW	O	IC101 (CXA1372Q) DEFECT circuit ON/OFF switching output.
2	DPCLK	O	Display data load clock output to IC104 (μPD76011CC-506-AB6).
3	INSW	I	S292 (loading-in switch) input.
4	OUTSW	I	S291 (loading-out switch) input.
5	LODIN	O	Output used to rotate M291 (loading motor) in the loading-in direction. *1
6	LODOUT	O	Output used to rotate M291 (loading motor) in the loading-out direction. *1
7	RESET	I	System reset input.
8	X2	I	Clock input.
9	X1	I	Clock input. (4MHz)
10	LDON	O	Optical pickup laser diode ON/OFF switching output. "H" for ON.
11	PRGL	O	Latch output to IC207 (digital filter).
12	XLT	O	Serial data latch output to IC206 (CXD2500BQ).
13	SQCLK	O	Subcode Q data read clock output to IC206 (CXD2500BQ).
14			Not used in this set (open).
15			Not used in this set (open).
16			Not used in this set (open).
17	ANASW	O	IC211 (TC9215F-TP1) analog bus control signal output.
18	ICSW	I/O	CD power control pin. OFF by 0 output, ON by input (high impedance state).
19			Not used in this set (open). (The same function as ICSW.)

Pin No.	Signal Name	I/O	Function	
20			Not used in this set (open). (The same function as ICSW.)	
21			Not used in this set (open). (The same function as ICSW.)	
22	IVICSW	I/O	CD power control pin. OFF by input (high impedance state), ON by 0 output.	
23			Not used in this set (open). (The same function with IVICSW.)	
24			Not used in this set (open). (The same function with IVICSW.)	
25			Not used in this set (open). (The same function with IVICSW.)	
26	Vss		Grounding pin.	
27	SENSE	I	SENSE input from IC206 (CXD2500BQ).	
28	ADJ	I	CD test mode input 1, "L" to inhibit GFS check to allow the spindle to rotate even if the frame sync does not appear during PLAY, PAUSE and SEARCH.	
29	KEYRQ	I	Key code fetch trigger for key code from IC104 (μPD78012GC-508-AB8). (One key allows four falls.)	
30	BSIN	I	Audio bus input.	
31	ADKEY	I	AD key input pin.	It is assumed that electrical adjustment is made with a CD only (without tuner microcomputer). (Usually 5V pull-up)
32	ADSEL	I	AD key input permission select pin.	
33			Not used in this set (GND).	
34			Not used in this set (GND).	
35			Not used in this set (GND).	
36			Not used in this set (GND).	
37	SUBQ	I	Subcode Q data input from IC206 (CXD2500BQ).	
38	GFS	I	GFS signal input from IC206 (CXD2500BQ). "L" for NG, "H" for OK.	
39	FOK	I	Focus OK signal input from IC101 (CXA1372Q). "H" for OK.	
40	AFADJ	I	CD test mode input 2.	
41	DACSW	I	IC208 (D/A converter) select pin. Set DACSW to 1 to select CXD2561. Set DACSW to 0 to select CXD2562.	
42	DATAA	O	Serial data output to IC206 (CXD2500BQ), IC207 (CXD2560M).	
43	CLK	O	Serial data load clock output to IC206 (CXD2500BQ), IC207 (CXD2560M).	
44	SCOR	I	Subcode sync S0 plus S1 detection input from IC206 (CXD2500BQ).	
45	RSTOUT	O	Reset output to peripheral ICs.	
46			Not used in this set (open).	
47			Not used in this set (open).	
48			Not used in this set (open).	
49			Not used in this set (open).	
50			Not used in this set (open).	
51			Not used in this set (open).	
52			Not used in this set (open).	
53			Not used in this set (open).	
54			Not used in this set (open).	
55			Not used in this set (open).	
56	CDBUSY	O	CD ON sets this "H".	
57	NC	—	Not used in this set (+5V).	
58	V_{DD}	—	Power pin (+5V).	
59	DPDAT 3	I/O	Data input from and display data output to IC104 (μPD78012GC-AB8).	
60	DPDAT 2	I/O	Data input from and display data output to IC104 (μPD78012GC-AB8).	
61	DPDAT 1	I/O	Data input from and display data output to IC104 (μPD78012GC-AB8).	
62	DPDAT 0	I/O	Data input from and display data output to IC104 (μPD78012GC-AB8).	

Pin No.	Signal Name	I/O	Function
63	AMUTE	O	Muting control output. "H" for muting.
64	BSOUT	O	Audio bus output pin.

*1 Loading motor control

	IN	OUT	BRAKE
LOG OUT ⑥	L	H	H
LOG IN ⑤	H	L	H

SECTION 4
EXPLODED VIEWS

NOTE:

- -XX and -X mean standardized parts, so they may have some difference from the original one.
- Color Indication of Appearance Parts
  Example:
  KNOB, BALANCE (WHITE) . . . (RED)
  ↑ ↑
  Parts Color Cabinet's Color
- Items marked "*" are not stocked since they are seldom required for routine service. Some delay should be anticipated when ordering these items.
- The mechanical parts with no reference number in the exploded views are not supplied.
- Hardware (# mark) list and accessories and packing materials are given in the last of the electrical parts list.

The components identified by mark ⚠ or dotted line with mark ⚠ are critical for safety.
Replace only with part number specified.

(1) MAIN SECTION

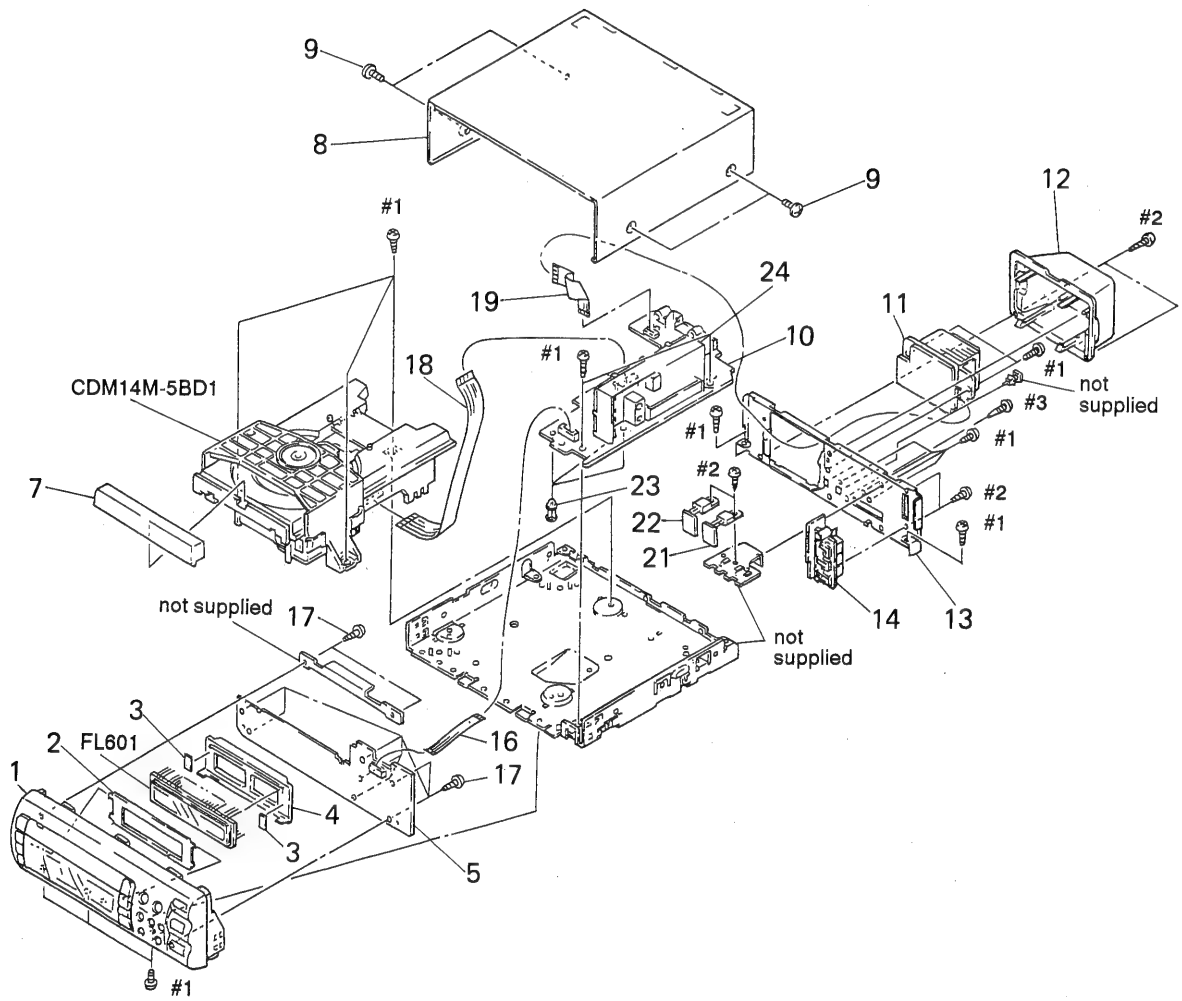

Ref. No.	Part No.	Description	Remark
1	X-4944-594-1	PANEL ASSY, FRONT	
2	4-961-884-01	PLATE, BLIND	
* 3	4-932-810-11	CUSHION (FL)	
* 4	4-954-187-11	HOLDER (FL)	
* 5	A-4369-703-A	PANEL BOARD, COMPLETE	
7	4-961-885-01	PANEL (LOADING)	
8	4-961-481-41	CASE	
9	3-363-099-21	SCREW (CASE 3 TP2)	
* 10	A-4369-512-A	MAIN BOARD, COMPLETE (AEP)	
* 10	A-4369-514-A	MAIN BOARD, COMPLETE (EXCEPT AEP, UK)	
* 10	A-4369-517-A	MAIN BOARD, COMPLETE (UK)	
* 11	1-649-676-13	TRANSFORMER BOARD	
* 12	4-961-886-11	COVER (TRANSFORMER)	
* 13	4-961-887-61	PANEL (HCD), BACK (AEP)	
* 13	4-961-887-71	PANEL (HCD), BACK (UK)	
* 13	4-961-887-81	PANEL (HCD), BACK (EXCEPT AEP, UK)	
* 14	1-653-252-11	ANTENNA BOARD (AEP, UK)	
* 14	1-649-678-13	ANTENNA BOARD (EXCEPT AEP, UK)	
16	1-751-981-11	WIRE (FLAT TYPE) (13 CORE)	
17	4-951-620-01	SCREW (2.6X8), +BVTP	
18	1-690-753-11	WIRE (FLAT TYPE) (22 CORE)	
19	1-751-980-11	WIRE (FLAT TYPE) (9 CORE)	
* 21	1-651-200-13	Q201 BOARD	
* 22	1-651-201-13	IC202 BOARD	
* 23	3-669-610-00	SPACER	
* 24	A-4303-459-A	TCB015 BOARD, COMPLETE (AEP, UK)	
* 24	A-4303-461-A	TCB015 BOARD, COMPLETE (EXCEPT AEP, UK)	
FL601	1-517-241-11	INDICATOR TUBE, FLUORESCENT	

(2) CD MECHANISM SECTION (CDM14M-5BD1)

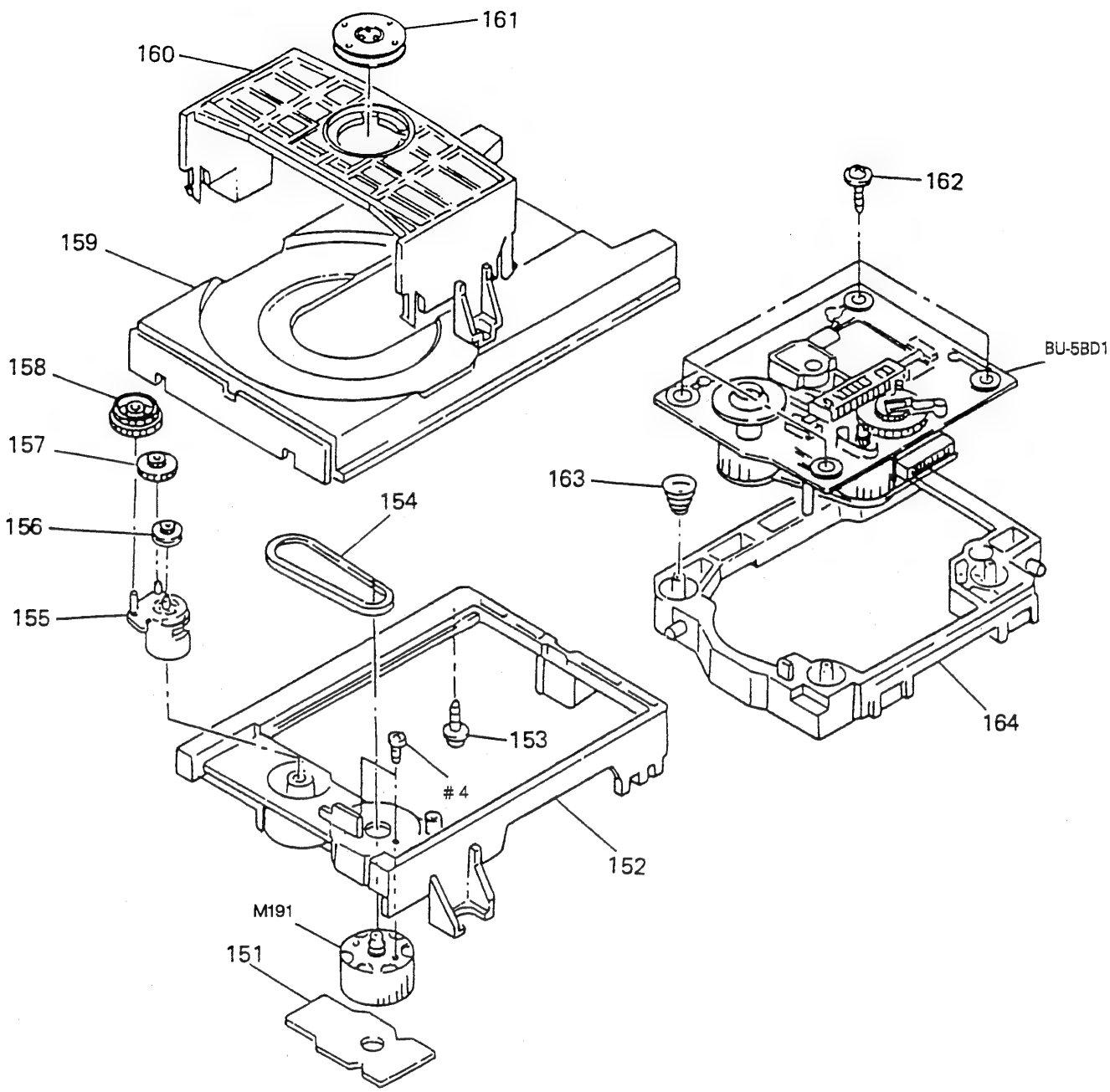

Ref. No.	Part No.	Description	Remark
* 151	1-632-202-11	LOADING BOARD	
152	4-933-111-01	CHASSIS (MD)	
* 153	4-917-583-21	BRACKET, YOKE	
154	4-927-649-01	BELT	
155	4-933-109-01	CAM	
156	4-927-651-01	PULLEY (S)	
157	4-927-628-01	GEAR (C)	
158	4-933-107-01	GEAR (PL)	
159	4-961-487-01	TABLE, DISK	
160	4-933-110-01	HOLDER (MG)	
* 161	1-452-538-11	MAGNET	
162	4-933-134-01	SCREW (+PTPWH M2.6X6)	
163	4-959-996-01	SPRING (932), COMPRESSION	
164	4-933-129-01	HOLDER (BU)	
M191	A-4604-363-A	MOTOR (L) ASSY	

(3) BASE UNIT SECTION (BU-5BD1)

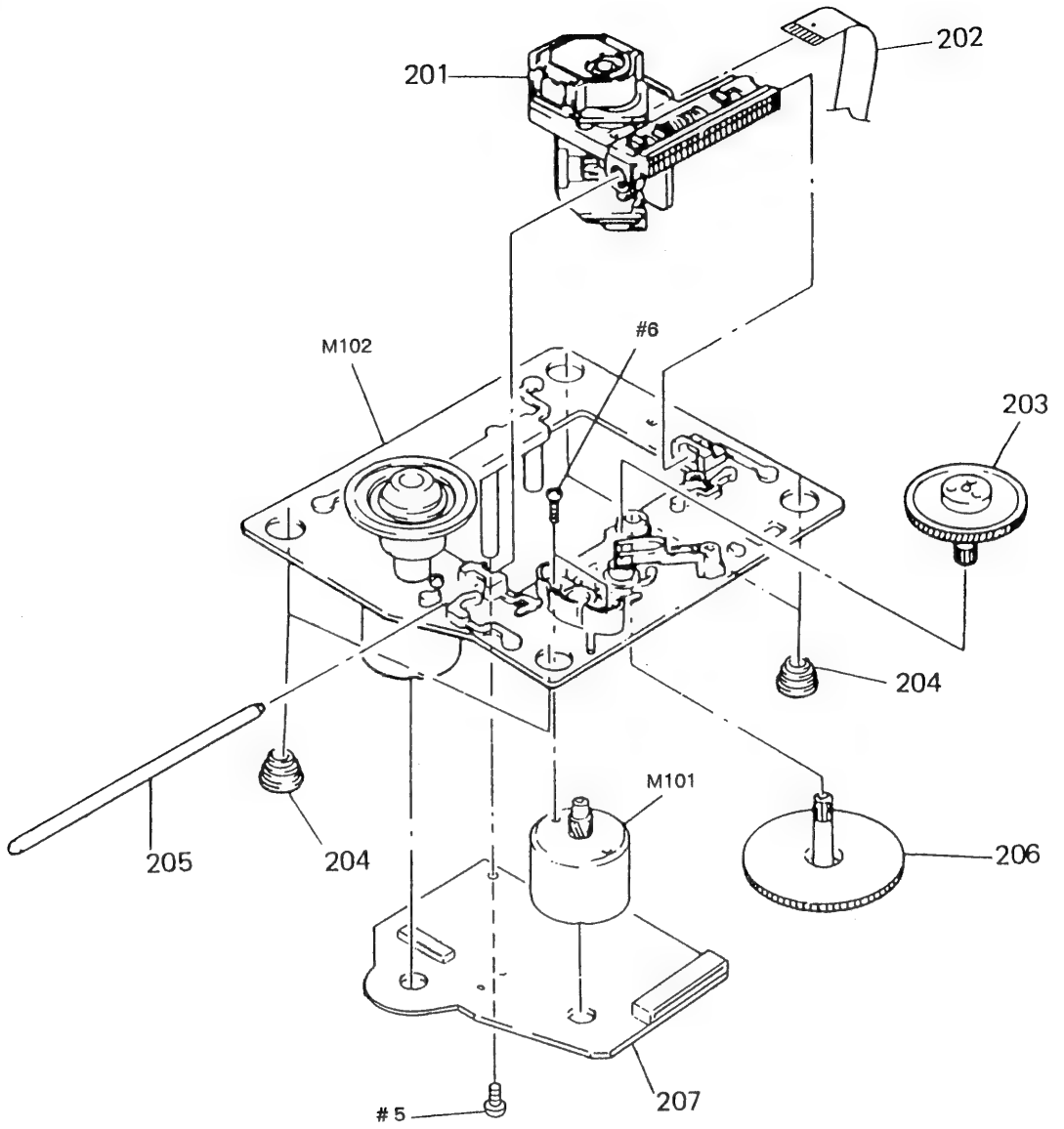

Ref. No.	Part No.	Description	Remark
⚠201	8-848-144-11	DEVICE, OPTICAL KSS-240A	
202	1-575-001-11	WIRE, FLAT TYPE (12 CORE)	
203	4-917-567-01	GEAR (M)	
204	4-951-940-01	INSULATOR (BU)	
205	4-917-565-01	SHAFT, SLED	
206	4-917-564-01	GEAR (P), FLATNESS	
* 207	A-4617-161-A	BD BOARD, COMPLETE	
M101	X-4917-504-1	MOTOR ASSY (SLED)	
M102	X-4917-523-3	MOTOR ASSY (SPINDLE)	

Note: The components identified by mark ⚠ or dotted line with mark ⚠ are critical for safety.
Replace only with part number specified.

ANTENNA **BD**

SECTION 5
ELECTRICAL PARTS LIST

NOTE:
- Due to standardization, replacements in the parts list may be different from the parts specified in the diagrams or the components used on the set.
- -XX and -X mean standardized parts, so they may have some difference from the original one.
- RESISTORS
  All resistors are in ohms.
  METAL:Metal-film resistor.
  METAL OXIDE: Metal oxide-film resistor.
  F:nonflammable
- Items marked "*" are not stocked since they are seldom required for routine service. Some delay should be anticipated when ordering these items.
- SEMICONDUCTORS
  In each case, u:μ, for example:
  uA..: μA.. uPA..: μPA..
  uPB..: μPB.. uPC..: μPC.. uPD..: μPD..
- CAPACITORS
  uF: μF
- COILS
  uH: μH

The components identified by mark ⚠ or dotted line with mark. ⚠ are critical for safety. Replace only with part number specified.

When indicating parts by reference number, please include the board.

Ref.No.	Part No.	Description			Remark
*	1-649-678-13	ANTENNA BOARD (EXCEPT AEP,UK)			
		**********			
*	1-653-252-11	ANTENNA BOARD (AEP,UK)			
		**********			
		< TERMINAL >			
* TM101	1-537-288-11	TERMINAL BOARD, ANTENNA (PAL) (AEP,UK)			
* TM101	1-537-466-11	TRAMINAL BOARD (ANT) (EXCEPT AEP,UK)			
**********					
*	A-4617-161-A	BD BOARD, COMPLETE			
		**********			
		< CAPACITOR >			
C101	1-163-038-00	CERAMIC CHIP	0.1uF		25V
C102	1-163-989-11	CERAMIC CHIP	0.033uF	10%	25V
C103	1-126-157-11	ELECT	10uF	20%	16V
C104	1-163-038-00	CERAMIC CHIP	0.1uF		25V
C105	1-126-154-11	ELECT	47uF	20%	6.3V
C106	1-126-154-11	ELECT	47uF	20%	6.3V
C107	1-126-154-11	ELECT	47uF	20%	6.3V
C108	1-163-038-00	CERAMIC CHIP	0.1uF		25V
C109	1-163-038-00	CERAMIC CHIP	0.1uF		25V
C110	1-163-989-11	CERAMIC CHIP	0.033uF	10%	25V
C111	1-131-367-00	TANTALUM	22uF	10%	20V
C112	1-164-232-11	CERAMIC CHIP	0.01uF		50V
C113	1-164-232-11	CERAMIC CHIP	0.01uF		50V
C114	1-164-161-11	CERAMIC CHIP	0.0022uF	10%	100V
C115	1-164-161-11	CERAMIC CHIP	0.0022uF	10%	100V
C117	1-163-038-00	CERAMIC CHIP	0.1uF		25V
C118	1-163-038-00	CERAMIC CHIP	0.1uF		25V
C119	1-164-161-11	CERAMIC CHIP	0.0022uF	10%	100V
C120	1-163-989-11	CERAMIC CHIP	0.033uF	10%	25V
C151	1-163-019-00	CERAMIC CHIP	0.0068uF	10%	50V
C152	1-163-038-00	CERAMIC CHIP	0.1uF		25V
C153	1-163-006-11	CERAMIC CHIP	560PF	10%	50V
C154	1-164-161-11	CERAMIC CHIP	0.0022uF	10%	100V
C155	1-163-023-00	CERAMIC CHIP	0.015uF	5%	50V
C171	1-163-038-00	CERAMIC CHIP	0.1uF		25V
C172	1-163-038-00	CERAMIC CHIP	0.1uF		25V
C173	1-163-038-00	CERAMIC CHIP	0.1uF		25V
C174	1-163-038-00	CERAMIC CHIP	0.1uF		25V
		< CONNECTOR >			
CN101	1-568-796-11	SOCKET, CONNECTOR 22P			
CN102	1-568-795-11	SOCKET, CONNECTOR 12P			
CN103	1-564-721-11	PIN, CONNECTOR (SMALL TYPE) 5P			
		< DIODE >			
D101	8-719-021-25	DIODE UZM4.7X			
		< IC >			
IC101	8-752-058-77	IC CXA1372AQ			
IC102	8-759-822-36	IC LA6532M			
IC103	8-759-633-65	IC M54641L			
		< JACK >			
J101	1-216-295-00	METAL GLAZE	0	5%	1/10W
J102	1-216-295-00	METAL GLAZE	0	5%	1/10W
		< TRANSISTOR >			
Q101	8-729-901-01	TRANSISTOR DTC144EK			
		< RESISTOR >			
R101	1-216-097-00	METAL CHIP	100K	5%	1/10W
R102	1-216-095-00	METAL CHIP	82K	5%	1/10W
R103	1-216-091-00	METAL CHIP	56K	5%	1/10W
R104	1-216-099-00	METAL CHIP	120K	5%	1/10W
R105	1-216-069-00	METAL CHIP	6.8K	5%	1/10W
R106	1-216-061-00	METAL CHIP	3.3K	5%	1/10W
R107	1-216-114-00	METAL GLAZE	510K	5%	1/10W
R108	1-216-105-00	METAL CHIP	220K	5%	1/10W
R109	1-216-061-00	METAL CHIP	3.3K	5%	1/10W
R110	1-216-049-00	METAL CHIP	1K	5%	1/10W
R111	1-216-049-00	METAL CHIP	1K	5%	1/10W
R112	1-216-083-00	METAL CHIP	27K	5%	1/10W
R113	1-216-071-00	METAL CHIP	8.2K	5%	1/10W
R114	1-216-105-00	METAL CHIP	220K	5%	1/10W

Ref. No.	Part No.	Description			Remark
R152	1-216-073-00	METAL CHIP	10K	5%	1/10W
R153	1-216-085-00	METAL CHIP	33K	5%	1/10W
R154	1-216-085-00	METAL CHIP	33K	5%	1/10W
R155	1-216-093-00	METAL CHIP	68K	5%	1/10W
R156	1-216-081-00	METAL CHIP	22K	5%	1/10W
R157	1-216-079-00	METAL CHIP	18K	5%	1/10W
R158	1-216-079-00	METAL CHIP	18K	5%	1/10W
R159	1-216-079-00	METAL CHIP	18K	5%	1/10W
R160	1-216-049-00	METAL CHIP	1K	5%	1/10W
R171	1-216-001-00	METAL CHIP	10	5%	1/10W
R172	1-216-001-00	METAL CHIP	10	5%	1/10W
R173	1-216-001-00	METAL CHIP	10	5%	1/10W
R174	1-216-001-00	METAL CHIP	10	5%	1/10W
		< VARIABLE RESISTOR >			
RV101	1-241-630-11	RES, ADJ, CARBON 10K			
RV102	1-241-630-11	RES, ADJ, CARBON 10K			
		< SWITCH >			
S101	1-572-085-11	SWITCH, LEAF (LIMIT)			
**********					
*	1-651-201-13	IC202 BOARD			
		**********			
		< IC >			
IC202	8-759-605-00	IC M5F78M07L			
**********					
*	1-632-202-11	LOADING BOARD			
		**********			
		< CONNECTOR >			
* CN301	1-564-707-11	PIN, CONNECTOR (SMALL TYPE) 5P			
		< SWITCH >			
S271	1-572-086-11	SWITCH, LEAF (LOAD OUT)			
S272	1-572-086-11	SWITCH, LEAF (LOAD IN)			
**********					

Ref. No.	Part No.	Description			Remark
*	A-4369-512-A	MAIN BOARD, COMPLETE (AEP)			
		**********			
*	A-4369-514-A	MAIN BOARD, COMPLETE (EXCEPT AEP, UK)			
		**********			
*	A-4369-517-A	MAIN BOARD, COMPLETE (UK)			
		**********			
*	4-870-539-00	PLATE, GROUND			
		< CAPACITOR >			
C128	1-163-038-00	CERAMIC CHIP	0.1uF		25V
C129	1-124-557-11	ELECT	1000uF	20%	25V
C130	1-126-933-11	ELECT	100uF	20%	16V
C131	1-126-933-11	ELECT	100uF	20%	16V
C132	1-164-505-11	CERAMIC CHIP	2.2uF		16V
C133	1-164-505-11	CERAMIC CHIP	2.2uF		16V
C135	1-136-177-00	FILM	1uF	5%	50V
C136	1-164-232-11	CERAMIC CHIP	0.01uF		50V
C137	1-163-104-00	CERAMIC CHIP	30PF	5%	50V
C138	1-163-108-00	CERAMIC CHIP	43PF	5%	50V
C139	1-124-903-11	ELECT	1uF	20%	50V
C140	1-164-232-11	CERAMIC CHIP	0.01uF		50V
C141	1-124-443-00	ELECT	100uF	20%	10V
C142	1-163-038-00	CERAMIC CHIP	0.1uF		25V
C143	1-124-477-11	ELECT	47uF	20%	25V
C144	1-163-038-00	CERAMIC CHIP	0.1uF		25V
C145	1-163-038-00	CERAMIC CHIP	0.1uF		25V
C147	1-124-477-11	ELECT	47uF	20%	25V
C148	1-124-443-00	ELECT	100uF	20%	10V
C149	1-164-005-11	CERAMIC CHIP	0.47uF		25V
C150	1-164-346-11	CERAMIC CHIP	1uF		16V
C151	1-126-933-11	ELECT	100uF	20%	16V
C152	1-163-038-00	CERAMIC CHIP	0.1uF		25V
C153	1-163-038-00	CERAMIC CHIP	0.1uF		25V
C154	1-164-505-11	CERAMIC CHIP	2.2uF		16V
C157	1-163-038-00	CERAMIC CHIP	0.1uF		25V
C159	1-163-038-00	CERAMIC CHIP	0.1uF		25V
C161	1-163-038-00	CERAMIC CHIP	0.1uF		25V
C162	1-163-038-00	CERAMIC CHIP	0.1uF		25V
C165	1-163-038-00	CERAMIC CHIP	0.1uF		25V
C201	1-126-964-11	ELECT	10uF	20%	50V
C202	1-163-141-00	CERAMIC CHIP	0.001uF	5%	50V
C203	1-124-564-11	ELECT	4700uF	20%	25V
C204	1-126-947-11	ELECT	47uF	20%	35V
C206	1-164-346-11	CERAMIC CHIP	1uF		16V
C207	1-164-695-11	CERAMIC CHIP	0.0022uF	5%	50V
C208	1-126-925-11	ELECT	470uF	20%	10V
C209	1-126-925-11	ELECT	470uF	20%	10V

MAIN

Ref. No.	Part No.	Description			Remark
C210	1-163-038-00	CERAMIC CHIP	0.1uF		25V
C211	1-126-933-11	ELECT	100uF	20%	16V
C212	1-124-443-00	ELECT	100uF	20%	10V
C213	1-164-346-11	CERAMIC CHIP	1uF		16V
C214	1-164-005-11	CERAMIC CHIP	0.47uF		25V
C215	1-164-505-11	CERAMIC CHIP	2.2uF		16V
C216	1-136-177-00	FILM	1uF	5%	50V
C218	1-163-038-00	CERAMIC CHIP	0.1uF		25V
C219	1-136-177-00	FILM	1uF	5%	50V
C220	1-164-505-11	CERAMIC CHIP	2.2uF		16V
C221	1-163-038-00	CERAMIC CHIP	0.1uF		25V
C222	1-163-038-00	CERAMIC CHIP	0.1uF		25V
C223	1-163-038-00	CERAMIC CHIP	0.1uF		25V
C224	1-164-005-11	CERAMIC CHIP	0.47uF		25V
C225	1-163-038-00	CERAMIC CHIP	0.1uF		25V
C226	1-163-035-00	CERAMIC CHIP	0.047uF		50V
C227	1-163-145-00	CERAMIC CHIP	0.0015uF	5%	50V
C228	1-163-038-00	CERAMIC CHIP	0.1uF		25V
C229	1-124-443-00	ELECT	100uF	20%	10V
C230	1-164-005-11	CERAMIC CHIP	0.47uF		25V
C231	1-164-005-11	CERAMIC CHIP	0.47uF		25V
C232	1-164-232-11	CERAMIC CHIP	0.01uF		50V
C233	1-164-695-11	CERAMIC CHIP	0.0022uF	5%	50V
C234	1-163-038-00	CERAMIC CHIP	0.1uF		25V
C235	1-163-038-00	CERAMIC CHIP	0.1uF		25V
C236	1-163-102-00	CERAMIC CHIP	24PF	5%	50V
C237	1-164-505-11	CERAMIC CHIP	2.2uF		16V
C238	1-126-923-11	ELECT	220uF	20%	10V
C239	1-163-038-00	CERAMIC CHIP	0.1uF		25V
C240	1-163-099-00	CERAMIC CHIP	18PF	5%	50V
C241	1-163-099-00	CERAMIC CHIP	18PF	5%	50V
C242	1-163-038-00	CERAMIC CHIP	0.1uF		25V
C243	1-163-038-00	CERAMIC CHIP	0.1uF		25V
C244	1-163-038-00	CERAMIC CHIP	0.1uF		25V
C245	1-163-115-00	CERAMIC CHIP	82PF	5%	50V
C246	1-126-923-11	ELECT	220uF	20%	10V
C247	1-163-038-00	CERAMIC CHIP	0.1uF		25V
C248	1-163-115-00	CERAMIC CHIP	82PF	5%	50V
C249	1-163-038-00	CERAMIC CHIP	0.1uF		25V
C250	1-124-443-00	ELECT	100uF	20%	10V
C251	1-163-115-00	CERAMIC CHIP	82PF	5%	50V
C252	1-163-115-00	CERAMIC CHIP	82PF	5%	50V
C255	1-163-038-00	CERAMIC CHIP	0.1uF		25V
C256	1-124-126-00	ELECT	47uF	20%	10V
C257	1-164-693-11	CERAMIC CHIP	0.0018uF	5%	50V
C258	1-163-115-00	CERAMIC CHIP	82PF	5%	50V
C259	1-163-115-00	CERAMIC CHIP	82PF	5%	50V
C261	1-163-038-00	CERAMIC CHIP	0.1uF		25V
C262	1-163-038-00	CERAMIC CHIP	0.1uF		25V
C263	1-124-126-00	ELECT	47uF	20%	10V
C264	1-164-693-11	CERAMIC CHIP	0.0018uF	5%	50V
C270	1-164-232-11	CERAMIC CHIP	0.01uF		50V

< CONNECTOR >

* CN101	1-568-832-11	SOCKET, CONNECTOR 13P	
* CN201	1-569-624-11	SOCKET, CONNECTOR 17P	
* CN204	1-764-108-11	CONNECTOR, FFC 22P	
* CN206	1-568-828-11	SOCKET, CONNECTOR 9P	

< DIODE >

D101	8-719-990-39	DIODE	DCB010
D102	8-719-022-03	DIODE	UZM11Z-T1
D103	8-719-990-39	DIODE	DCB010
D104	8-719-990-39	DIODE	DCB010
D105	8-719-990-39	DIODE	DCB010
D110	8-719-021-87	DIODE	UZM10B-T1
D201	8-719-200-02	DIODE	10E2
D202	8-719-200-02	DIODE	10E2
D203	8-719-200-02	DIODE	10E2
D204	8-719-200-02	DIODE	10E2
D206	8-719-990-39	DIODE	DCB010

< IC >

IC102	8-759-051-64	IC	TC9215F-TP1
IC104	8-759-279-37	IC	uPD78011GC-607-AB8
IC106	8-759-248-67	IC	AT24C01-10SC
IC201	8-759-636-24	IC	M5290FP
IC203	8-759-820-84	IC	L78MR05
IC205	8-759-163-41	IC	uPD75116GF-G38-3BE
IC206	8-752-351-78	IC	CXD2500BQ
IC207	8-752-356-03	IC	CXD2567M
IC208	8-752-351-19	IC	CXD2561BM
IC209	8-759-996-43	IC	RC4558PS
IC212	8-749-923-04	IC	TOTX178

< JUMPER RESISTOR >

JW103	1-216-295-00	METAL GLAZE	0	5%	1/10W (AEP, UK)
JW104	1-216-295-00	METAL GLAZE	0	5%	1/10W (EXCEPT AEP, UK)
JW105	1-216-295-00	METAL GLAZE	0	5%	1/10W
JW171	1-216-295-00	METAL GLAZE	0	5%	1/10W

< COIL >

L101	1-408-425-00	INDUCTOR	220uH
L105	1-410-377-31	INDUCTOR CHIP	4.7uH
L107	1-410-658-31	INDUCTOR CHIP	220uH
L108	1-410-658-31	INDUCTOR CHIP	220uH

Ref. No.	Part No.	Description			Remark
L109	1-410-381-11	INDUCTOR CHIP	10uH		
L110	1-410-381-11	INDUCTOR CHIP	10uH		
L201	1-216-037-00	METAL CHIP	330	5%	1/10W
L202	1-410-464-11	INDUCTOR	3.3uH		
L203	1-410-397-21	FERRITE BEAD INDUCTOR			
L204	1-410-397-21	FERRITE BEAD INDUCTOR			
L205	1-410-658-31	INDUCTOR CHIP	220uH		
L207	1-410-658-31	INDUCTOR CHIP	220uH		
		< TRANSISTOR >			
Q101	8-729-805-41	TRANSISTOR	2SC3398		
Q102	8-729-805-41	TRANSISTOR	2SC3398		
Q103	8-729-232-69	TRANSISTOR	2SK208GR3		
Q104	8-729-018-60	TRANSISTOR	2SD2012-LC		
Q105	8-729-101-07	TRANSISTOR	2SB798-DL		
Q106	8-729-805-65	TRANSISTOR	2SA1344		
Q107	8-729-805-65	TRANSISTOR	2SA1344		
Q108	8-729-805-41	TRANSISTOR	2SC3398		
Q109	8-729-120-28	TRANSISTOR	2SC1623-L5L6		
Q115	8-729-120-28	TRANSISTOR	2SC1623-L5L6		
Q202	8-729-140-75	TRANSISTOR	2SD999-CLCK		
Q205	8-729-120-28	TRANSISTOR	2SC1623-L5L6		
Q208	8-729-805-40	TRANSISTOR	2SC3900		
Q209	8-729-805-40	TRANSISTOR	2SC3900		
Q210	8-729-805-65	TRANSISTOR	2SA1344		
Q211	8-729-805-65	TRANSISTOR	2SA1344		
		< RESISTOR >			
R110	1-216-082-00	METAL GLAZE	24K	5%	1/10W
R111	1-216-082-00	METAL GLAZE	24K	5%	1/10W
R130	1-216-041-00	METAL CHIP	470	5%	1/10W
R138	1-216-057-00	METAL CHIP	2.2K	5%	1/10W
R139	1-216-073-00	METAL CHIP	10K	5%	1/10W
R140	1-216-049-00	METAL CHIP	1K	5%	1/10W
R141	1-216-049-00	METAL CHIP	1K	5%	1/10W
R142	1-216-049-00	METAL CHIP	1K	5%	1/10W
R143	1-216-049-00	METAL CHIP	1K	5%	1/10W
R144	1-216-061-00	METAL CHIP	3.3K	5%	1/10W
R145	1-216-061-00	METAL CHIP	3.3K	5%	1/10W
R146	1-216-061-00	METAL CHIP	3.3K	5%	1/10W
R147	1-216-061-00	METAL CHIP	3.3K	5%	1/10W
R148	1-216-073-00	METAL CHIP	10K	5%	1/10W
R149	1-216-049-00	METAL CHIP	1K	5%	1/10W
R150	1-216-073-00	METAL CHIP	10K	5%	1/10W
R151	1-216-073-00	METAL CHIP	10K	5%	1/10W
R152	1-216-097-00	METAL CHIP	100K	5%	1/10W
R153	1-216-073-00	METAL CHIP	10K	5%	1/10W
R158	1-216-073-00	METAL CHIP	10K	5%	1/10W

Ref. No.	Part No.	Description			Remark
R159	1-216-073-00	METAL CHIP	10K	5%	1/10W
R160	1-216-061-00	METAL CHIP	3.3K	5%	1/10W
R161	1-216-001-00	METAL CHIP	10	5%	1/10W
R162	1-216-073-00	METAL CHIP	10K	5%	1/10W
R163	1-216-065-00	METAL CHIP	4.7K	5%	1/10W
R164	1-216-073-00	METAL CHIP	10K	5%	1/10W
R165	1-216-073-00	METAL CHIP	10K	5%	1/10W
R166	1-216-073-00	METAL CHIP	10K	5%	1/10W
R167	1-216-073-00	METAL CHIP	10K	5%	1/10W
R168	1-216-073-00	METAL CHIP	10K	5%	1/10W
R201	1-216-097-00	METAL CHIP	100K	5%	1/10W
R202	1-216-097-00	METAL CHIP	100K	5%	1/10W
R203	1-216-065-00	METAL CHIP	4.7K	5%	1/10W
R204	1-216-065-00	METAL CHIP	4.7K	5%	1/10W
R207	1-216-073-00	METAL CHIP	10K	5%	1/10W
R208	1-216-065-00	METAL CHIP	4.7K	5%	1/10W
R209	1-216-001-00	METAL CHIP	10	5%	1/10W
R210	1-216-073-00	METAL CHIP	10K	5%	1/10W
R211	1-216-057-00	METAL CHIP	2.2K	5%	1/10W
R212	1-216-057-00	METAL CHIP	2.2K	5%	1/10W
R213	1-216-073-00	METAL CHIP	10K	5%	1/10W
R214	1-216-073-00	METAL CHIP	10K	5%	1/10W
R215	1-216-073-00	METAL CHIP	10K	5%	1/10W
R216	1-216-061-00	METAL CHIP	3.3K	5%	1/10W
R217	1-216-073-00	METAL CHIP	10K	5%	1/10W
R218	1-216-073-00	METAL CHIP	10K	5%	1/10W
R219	1-216-073-00	METAL CHIP	10K	5%	1/10W
R220	1-410-464-11	INDUCTOR	3.3uH		
R221	1-216-061-00	METAL CHIP	3.3K	5%	1/10W
R222	1-216-073-00	METAL CHIP	10K	5%	1/10W
R223	1-216-061-00	METAL CHIP	3.3K	5%	1/10W
R224	1-216-073-00	METAL CHIP	10K	5%	1/10W
R225	1-216-097-00	METAL CHIP	100K	5%	1/10W
R226	1-216-049-00	METAL CHIP	1K	5%	1/10W
R227	1-216-049-00	METAL CHIP	1K	5%	1/10W
R228	1-216-053-00	METAL CHIP	1.5K	5%	1/10W
R229	1-216-025-00	METAL CHIP	100	5%	1/10W
R230	1-216-025-00	METAL CHIP	100	5%	1/10W
R231	1-216-025-00	METAL CHIP	100	5%	1/10W
R232	1-216-049-00	METAL CHIP	1K	5%	1/10W
R233	1-216-049-00	METAL CHIP	1K	5%	1/10W
R234	1-216-049-00	METAL CHIP	1K	5%	1/10W
R235	1-216-049-00	METAL CHIP	1K	5%	1/10W
R236	1-216-049-00	METAL CHIP	1K	5%	1/10W
R237	1-216-049-00	METAL CHIP	1K	5%	1/10W
R238	1-216-049-00	METAL CHIP	1K	5%	1/10W
R240	1-216-121-00	METAL CHIP	1M	5%	1/10W
R241	1-216-689-11	METAL CHIP	39K	0.5%	1/10W
R242	1-216-082-00	METAL GLAZE	24K	5%	1/10W

MAIN PANEL

Ref. No.	Part No.	Description			Remark
R243	1-216-689-11	METAL CHIP	39K	0.5%	1/10W
R244	1-216-689-11	METAL CHIP	39K	0.5%	1/10W
R245	1-216-689-11	METAL CHIP	39K	0.5%	1/10W
R246	1-216-082-00	METAL GLAZE	24K	5%	1/10W
R247	1-216-689-11	METAL CHIP	39K	0.5%	1/10W
R248	1-216-689-11	METAL CHIP	39K	0.5%	1/10W
R249	1-216-689-11	METAL CHIP	39K	0.5%	1/10W
R250	1-216-082-00	METAL GLAZE	24K	5%	1/10W
R251	1-216-082-00	METAL GLAZE	24K	5%	1/10W
R252	1-216-689-11	METAL CHIP	39K	0.5%	1/10W
R253	1-216-079-00	METAL CHIP	18K	5%	1/10W
R254	1-216-079-00	METAL CHIP	18K	5%	1/10W
R255	1-216-082-00	METAL GLAZE	24K	5%	1/10W
R256	1-216-082-00	METAL GLAZE	24K	5%	1/10W
R259	1-216-105-00	METAL CHIP	220K	5%	1/10W
R260	1-216-041-00	METAL CHIP	470	5%	1/10W
R261	1-216-079-00	METAL CHIP	18K	5%	1/10W
R262	1-216-079-00	METAL CHIP	18K	5%	1/10W
R263	1-216-082-00	METAL GLAZE	24K	5%	1/10W
R264	1-216-082-00	METAL GLAZE	24K	5%	1/10W
R267	1-216-105-00	METAL CHIP	220K	5%	1/10W
R268	1-216-041-00	METAL CHIP	470	5%	1/10W
R270	1-216-097-00	METAL CHIP	100K	5%	1/10W
R271	1-216-097-00	METAL CHIP	100K	5%	1/10W
R280	1-216-049-00	METAL CHIP	1K	5%	1/10W
R281	1-216-049-00	METAL CHIP	1K	5%	1/10W
R282	1-216-049-00	METAL CHIP	1K	5%	1/10W
R283	1-216-049-00	METAL CHIP	1K	5%	1/10W
R285	1-216-049-00	METAL CHIP	1K	5%	1/10W

< VIBRATOR >

X102	1-579-600-11	VIBRATOR, CERAMIC (8MHz)
X201	1-577-358-21	VIBRATOR, CERAMIC (4MHz)
X202	1-579-314-11	VIBRATOR, CRYSTAL (22.6MHz)

****

*	A-4369-703-A	PANEL BOARD, COMPLETE

****

*	4-932-810-11	CUSHION (FL)
*	4-954-187-11	HOLDER (FL)

< CAPACITOR >

Ref. No.	Part No.	Description			Remark
C601	1-163-117-00	CERAMIC CHIP	100PF	5%	50V
C602	1-163-117-00	CERAMIC CHIP	100PF	5%	50V
C603	1-163-117-00	CERAMIC CHIP	100PF	5%	50V
C604	1-163-117-00	CERAMIC CHIP	100PF	5%	50V
C605	1-163-117-00	CERAMIC CHIP	100PF	5%	50V
C606	1-163-117-00	CERAMIC CHIP	100PF	5%	50V
C607	1-163-117-00	CERAMIC CHIP	100PF	5%	50V
C608	1-163-117-00	CERAMIC CHIP	100PF	5%	50V
C609	1-163-117-00	CERAMIC CHIP	100PF	5%	50V
C610	1-163-117-00	CERAMIC CHIP	100PF	5%	50V
C611	1-163-117-00	CERAMIC CHIP	100PF	5%	50V
C612	1-163-117-00	CERAMIC CHIP	100PF	5%	50V
C613	1-163-117-00	CERAMIC CHIP	100PF	5%	50V
C614	1-124-584-00	ELECT	100uF	20%	10V
C615	1-163-038-00	CERAMIC CHIP	0.1uF		25V
C616	1-163-117-00	CERAMIC CHIP	100PF	5%	50V
C617	1-124-248-00	ELECT	22uF	20%	35V
C618	1-136-173-00	FILM	0.47uF	5%	50V
C619	1-136-173-00	FILM	0.47uF	5%	50V
C620	1-136-173-00	FILM	0.47uF	5%	50V
C621	1-163-117-00	CERAMIC CHIP	100PF	5%	50V
C622	1-164-232-11	CERAMIC CHIP	0.01uF		50V
C623	1-163-117-00	CERAMIC CHIP	100PF	5%	50V
C625	1-164-346-11	CERAMIC CHIP	1uF		16V
C626	1-163-117-00	CERAMIC CHIP	100PF	5%	50V
C627	1-163-117-00	CERAMIC CHIP	100PF	5%	50V
C628	1-163-117-00	CERAMIC CHIP	100PF	5%	50V
C629	1-163-117-00	CERAMIC CHIP	100PF	5%	50V
C630	1-163-117-00	CERAMIC CHIP	100PF	5%	50V
C631	1-163-117-00	CERAMIC CHIP	100PF	5%	50V
C632	1-163-117-00	CERAMIC CHIP	100PF	5%	50V
C633	1-163-117-00	CERAMIC CHIP	100PF	5%	50V
C634	1-163-117-00	CERAMIC CHIP	100PF	5%	50V
C635	1-163-117-00	CERAMIC CHIP	100PF	5%	50V
C636	1-163-117-00	CERAMIC CHIP	100PF	5%	50V
C637	1-163-117-00	CERAMIC CHIP	100PF	5%	50V
C638	1-163-117-00	CERAMIC CHIP	100PF	5%	50V
C639	1-163-117-00	CERAMIC CHIP	100PF	5%	50V
C640	1-163-117-00	CERAMIC CHIP	100PF	5%	50V
C641	1-163-117-00	CERAMIC CHIP	100PF	5%	50V
C642	1-163-117-00	CERAMIC CHIP	100PF	5%	50V
C643	1-163-117-00	CERAMIC CHIP	100PF	5%	50V
C644	1-163-117-00	CERAMIC CHIP	100PF	5%	50V
C645	1-163-117-00	CERAMIC CHIP	100PF	5%	50V
C646	1-163-117-00	CERAMIC CHIP	100PF	5%	50V
C647	1-163-117-00	CERAMIC CHIP	100PF	5%	50V
C648	1-163-117-00	CERAMIC CHIP	100PF	5%	50V
C649	1-163-117-00	CERAMIC CHIP	100PF	5%	50V
C650	1-163-117-00	CERAMIC CHIP	100PF	5%	50V
C651	1-163-117-00	CERAMIC CHIP	100PF	5%	50V
C652	1-163-117-00	CERAMIC CHIP	100PF	5%	50V
C653	1-163-117-00	CERAMIC CHIP	100PF	5%	50V
C654	1-163-117-00	CERAMIC CHIP	100PF	5%	50V
C655	1-163-117-00	CERAMIC CHIP	100PF	5%	50V
C656	1-163-117-00	CERAMIC CHIP	100PF	5%	50V

Ref. No.	Part No.	Description			Remark
C657	1-163-117-00	CERAMIC CHIP	100PF	5%	50V
C658	1-163-117-00	CERAMIC CHIP	100PF	5%	50V
C659	1-163-117-00	CERAMIC CHIP	100PF	5%	50V
C660	1-163-117-00	CERAMIC CHIP	100PF	5%	50V
		< CONNECTOR >			
* CN601	1-568-856-11	SOCKET, CONNECTOR 13P			
		< FILTER >			
FL601	1-517-241-11	INDICATOR TUBE, FLUORESCENT			
		< IC >			
IC601	8-759-254-76	IC M66004M4FP			
		< COIL >			
L601	1-408-793-21	INDUCTOR CHIP	220uH		
L602	1-410-393-11	INDUCTOR CHIP	100uH		
		< TRANSISTOR >			
Q603	8-729-805-41	TRANSISTOR 2SC3398			
		< RESISTOR >			
R601	1-216-041-00	METAL CHIP	470	5%	1/10W
R602	1-216-045-00	METAL CHIP	680	5%	1/10W
R603	1-216-049-00	METAL CHIP	1K	5%	1/10W
R604	1-216-053-00	METAL CHIP	1.5K	5%	1/10W
R605	1-216-057-00	METAL CHIP	2.2K	5%	1/10W
R606	1-216-065-00	METAL CHIP	4.7K	5%	1/10W
R607	1-216-075-00	METAL CHIP	12K	5%	1/10W
R608	1-216-041-00	METAL CHIP	470	5%	1/10W
R609	1-216-045-00	METAL CHIP	680	5%	1/10W
R610	1-216-049-00	METAL CHIP	1K	5%	1/10W
R611	1-216-053-00	METAL CHIP	1.5K	5%	1/10W
R612	1-216-057-00	METAL CHIP	2.2K	5%	1/10W
R613	1-216-065-00	METAL CHIP	4.7K	5%	1/10W
R614	1-216-075-00	METAL CHIP	12K	5%	1/10W
R616	1-216-083-00	METAL CHIP	27K	5%	1/10W
R617	1-216-097-00	METAL CHIP	100K	5%	1/10W
R622	1-216-097-00	METAL CHIP	100K	5%	1/10W
		< SWITCH >			
S601	1-554-303-21	SWITCH, TACTILE (▷)			
S602	1-554-303-21	SWITCH, TACTILE (□)			
S603	1-554-303-21	SWITCH, TACTILE (BAND)			
S604	1-554-303-21	SWITCH, TACTILE (MEMORY)			
S605	1-554-303-21	SWITCH, TACTILE (MODE)			
S606	1-554-303-21	SWITCH, TACTILE (STEREO/MONO)			
S607	1-554-303-21	SWITCH, TACTILE (+)			
S608	1-554-303-21	SWITCH, TACTILE (-)			
S609	1-554-303-21	SWITCH, TACTILE (⏭/▶▶)			
S610	1-554-303-21	SWITCH, TACTILE (⏮/◀◀)			
S611	1-554-303-21	SWITCH, TACTILE (EDIT)			
S612	1-554-303-21	SWITCH, TACTILE (REPEAT)			
S613	1-554-303-21	SWITCH, TACTILE (TIME)			
S614	1-554-303-21	SWITCH, TACTILE (PROGRAM)			
S615	1-554-303-21	SWITCH, TACTILE (CONTINUE)			
S616	1-554-303-21	SWITCH, TACTILE (SHUFFLE)			
S617	1-554-303-21	SWITCH, TACTILE (⏏ OPEN/CLOSE)			
**********					
*	1-651-200-13	Q201 BOARD			
		**********			
		< TRANSISTOR >			
Q201	8-729-018-59	TRANSISTOR 2SB1375-LC			
**********					
*	A-4303-459-A	TCB015 BOARD, COMPLETE (AEP, UK)			
		**********			
		< CAPACITOR >			
C1	1-126-934-11	ELECT	220uF	20%	16V
C2	1-163-031-11	CERAMIC CHIP	0.01uF		50V
C3	1-163-009-11	CERAMIC CHIP	1000PF	10%	50V
C5	1-163-031-11	CERAMIC CHIP	0.01uF		50V
C6	1-163-038-00	CERAMIC CHIP	0.1uF		25V
C8	1-163-031-11	CERAMIC CHIP	0.01uF		50V
C9	1-163-012-00	CERAMIC CHIP	1800PF	10%	50V
C10	1-163-011-11	CERAMIC CHIP	1500PF	10%	50V
C11	1-163-089-00	CERAMIC CHIP	6PF	0.5PF	50V
C12	1-163-227-11	CERAMIC CHIP	10PF	0.5PF	50V
C13	1-163-089-00	CERAMIC CHIP	6PF	0.5PF	50V
C21	1-163-099-00	CERAMIC CHIP	18PF	5%	50V
C22	1-163-099-00	CERAMIC CHIP	18PF	5%	50V
C23	1-163-031-11	CERAMIC CHIP	0.01uF		50V
C24	1-163-031-11	CERAMIC CHIP	0.01uF		50V
C25	1-163-031-11	CERAMIC CHIP	0.01uF		50V
C26	1-164-346-11	CERAMIC CHIP	1uF		16V
C27	1-124-257-00	ELECT	2.2uF	20%	50V
C29	1-163-031-11	CERAMIC CHIP	0.01uF		50V
C31	1-124-257-00	ELECT	2.2uF	20%	50V
C32	1-163-031-11	CERAMIC CHIP	0.01uF		50V
C33	1-163-038-00	CERAMIC CHIP	0.1uF		25V
C34	1-164-005-11	CERAMIC CHIP	0.47uF		25V
C35	1-163-033-00	CERAMIC CHIP	0.022uF		50V
C36	1-163-033-00	CERAMIC CHIP	0.022uF		50V

TCB015

Ref. No.	Part No.	Description			Remark
C51	1-163-031-11	CERAMIC CHIP	0.01uF		50V
C52	1-126-162-11	ELECT	3.3uF	20%	50V
C53	1-163-031-11	CERAMIC CHIP	0.01uF		50V
C54	1-163-031-11	CERAMIC CHIP	0.01uF		50V
C55	1-163-105-00	CERAMIC CHIP	33PF	5%	50V
C57	1-164-346-11	CERAMIC CHIP	1uF		16V
C58	1-164-346-11	CERAMIC CHIP	1uF		16V
C59	1-164-346-11	CERAMIC CHIP	1uF		16V
C60	1-163-038-00	CERAMIC CHIP	0.1uF		25V
C61	1-163-022-00	CERAMIC CHIP	0.012uF	10%	50V
C62	1-163-022-00	CERAMIC CHIP	0.012uF	10%	50V
C63	1-164-346-11	CERAMIC CHIP	1uF		16V
C64	1-164-346-11	CERAMIC CHIP	1uF		16V
C65	1-164-346-11	CERAMIC CHIP	1uF		16V
C66	1-164-346-11	CERAMIC CHIP	1uF		16V
C69	1-163-031-11	CERAMIC CHIP	0.01uF		50V
C71	1-163-031-11	CERAMIC CHIP	0.01uF		50V
C72	1-126-934-11	ELECT	220uF	20%	16V
C73	1-124-257-00	ELECT	2.2uF	20%	50V
C74	1-163-031-11	CERAMIC CHIP	0.01uF		50V
C75	1-126-157-11	ELECT	10uF	20%	16V
C76	1-126-933-11	ELECT	100uF	20%	16V
C79	1-126-157-11	ELECT	10uF	20%	16V
C80	1-126-925-11	ELECT	470uF	20%	10V
C81	1-163-031-11	CERAMIC CHIP	0.01uF		50V
C82	1-163-031-11	CERAMIC CHIP	0.01uF		50V
C83	1-163-031-11	CERAMIC CHIP	0.01uF		50V
C86	1-163-016-00	CERAMIC CHIP	3900PF	10%	50V
C87	1-163-016-00	CERAMIC CHIP	3900PF	10%	50V
		< FILTER >			
CF1	1-567-389-11	FILTER, CERAMIC			
CF51	1-567-389-11	FILTER, CERAMIC			
		< TERMINAL >			
* CN3	1-537-613-11	TERMINAL (8P)			
		< DIODE >			
D21	8-719-422-46	DIODE MA8056			
D51	8-719-016-74	DIODE 1SS352			
		< FRONT END >			
FE1	1-465-673-11	FRONT END (2 BAND)			
FE2	1-239-261-12	ESCAPSULATED COMPONENT			
FE3	1-236-463-11	ESCAPSULATED COMPONENT			

Ref. No.	Part No.	Description			Remark
		< IC >			
IC21	8-759-821-43	IC LC7218M			
IC51	8-759-823-68	IC LA1851NM			
		< TRANSFORMER >			
IFT51	1-406-821-11	COIL (DISCRIMINATOR)			
IFT52	1-404-713-11	TRANSFORMER, IF			
		< JUMPER RESISTOR >			
JW1	1-216-295-00	METAL CHIP	0	5%	1/10W
JW2	1-216-295-00	METAL CHIP	0	5%	1/10W
JW5	1-216-295-00	METAL CHIP	0	5%	1/10W
JW7	1-216-295-00	METAL CHIP	0	5%	1/10W
JW8	1-216-295-00	METAL CHIP	0	5%	1/10W
JW9	1-216-295-00	METAL CHIP	0	5%	1/10W
		< COIL >			
L1	1-408-793-21	CHIP INDUCTOR 220uH			
L51	1-408-798-00	CHIP INDUCTOR 1MMH			
		< FILTER >			
LPF51	1-239-597-11	FILTER, LOW PASS			
LPF52	1-239-597-11	FILTER, LOW PASS			
		< TRANSISTOR >			
Q1	8-729-804-72	TRANSISTOR 2SC2814-F4			
Q3	8-729-810-16	TRANSISTOR 2SA1678			
Q4	8-729-602-36	TRANSISTOR 2SA1602-F			
Q5	8-729-810-28	TRANSISTOR 2SC4398			
Q6	8-729-602-36	TRANSISTOR 2SA1602-F			
Q7	8-729-810-28	TRANSISTOR 2SC4398			
Q21	8-729-602-21	TRANSISTOR 2SC4154-F			
Q22	8-729-232-69	TRANSISTOR 2SK208GR3			
Q23	8-729-232-59	TRANSISTOR 2SC4666B			
Q24	8-729-232-69	TRANSISTOR 2SK208GR3			
Q25	8-729-232-59	TRANSISTOR 2SC4666B			
Q51	8-729-602-21	TRANSISTOR 2SC4154-F			
Q52	8-729-602-21	TRANSISTOR 2SC4154-F			
Q53	8-729-810-28	TRANSISTOR 2SC4398			
		< RESISTOR >			
R1	1-216-037-00	METAL CHIP	330	5%	1/10W
R2	1-216-037-00	METAL CHIP	330	5%	1/10W
R3	1-216-109-00	METAL CHIP	330K	5%	1/10W
R4	1-216-037-00	METAL CHIP	330	5%	1/10W
R7	1-216-017-00	METAL CHIP	47	5%	1/10W
R8	1-216-057-00	METAL CHIP	2.2K	5%	1/10W

Ref. No.	Part No.	Description				Remark
R9	1-216-089-11	METAL CHIP	47K	5%	1/10W	
R10	1-216-097-11	METAL CHIP	100K	5%	1/10W	
R11	1-216-065-00	METAL CHIP	4.7K	5%	1/10W	
R12	1-216-057-00	METAL CHIP	2.2K	5%	1/10W	
R13	1-216-089-11	METAL CHIP	47K	5%	1/10W	
R14	1-216-081-00	METAL CHIP	22K	5%	1/10W	
R15	1-216-121-00	METAL CHIP	1M	5%	1/10W	
R16	1-216-089-11	METAL CHIP	47K	5%	1/10W	
R21	1-216-049-00	METAL CHIP	1K	5%	1/10W	
R22	1-216-049-00	METAL CHIP	1K	5%	1/10W	
R23	1-216-049-00	METAL CHIP	1K	5%	1/10W	
R24	1-216-025-00	METAL CHIP	100	5%	1/10W	
R25	1-216-065-00	METAL CHIP	4.7K	5%	1/10W	
R26	1-216-049-00	METAL CHIP	1K	5%	1/10W	
R27	1-216-073-00	METAL CHIP	10K	5%	1/10W	
R28	1-216-073-00	METAL CHIP	10K	5%	1/10W	
R29	1-216-025-00	METAL CHIP	100	5%	1/10W	
R30	1-216-061-00	METAL CHIP	3.3K	5%	1/10W	
R31	1-216-043-00	METAL CHIP	560	5%	1/10W	
R32	1-216-049-00	METAL CHIP	1K	5%	1/10W	
R33	1-216-035-00	METAL CHIP	270	5%	1/10W	
R34	1-216-065-00	METAL CHIP	4.7K	5%	1/10W	
R35	1-216-057-00	METAL CHIP	2.2K	5%	1/10W	
R36	1-216-065-00	METAL CHIP	4.7K	5%	1/10W	
R37	1-216-065-00	METAL CHIP	4.7K	5%	1/10W	
R38	1-216-025-00	METAL CHIP	100	5%	1/10W	
R39	1-216-061-00	METAL CHIP	3.3K	5%	1/10W	
R40	1-216-043-00	METAL CHIP	560	5%	1/10W	
R41	1-216-049-00	METAL CHIP	1K	5%	1/10W	
R42	1-216-035-00	METAL CHIP	270	5%	1/10W	
R43	1-216-081-00	METAL CHIP	22K	5%	1/10W	
R44	1-216-057-00	METAL CHIP	2.2K	5%	1/10W	
R45	1-216-065-00	METAL CHIP	4.7K	5%	1/10W	
R46	1-216-065-00	METAL CHIP	4.7K	5%	1/10W	
R51	1-216-049-00	METAL CHIP	1K	5%	1/10W	
R52	1-216-081-00	METAL CHIP	22K	5%	1/10W	
R53	1-216-085-00	METAL CHIP	33K	5%	1/10W	
R54	1-216-071-00	METAL CHIP	8.2K	5%	1/10W	
R55	1-216-075-00	METAL CHIP	12K	5%	1/10W	
R57	1-216-073-00	METAL CHIP	10K	5%	1/10W	
R58	1-216-066-00	METAL CHIP	5.1K	5%	1/10W	
R59	1-216-065-00	METAL CHIP	4.7K	5%	1/10W	
R60	1-216-065-00	METAL CHIP	4.7K	5%	1/10W	
R61	1-216-115-00	METAL CHIP	560K	5%	1/10W	
R62	1-216-115-00	METAL CHIP	560K	5%	1/10W	
R63	1-216-049-00	METAL CHIP	1K	5%	1/10W	
R64	1-216-049-00	METAL CHIP	1K	5%	1/10W	
R65	1-216-073-00	METAL CHIP	10K	5%	1/10W	
R66	1-216-073-00	METAL CHIP	10K	5%	1/10W	
R67	1-216-057-00	METAL CHIP	2.2K	5%	1/10W	
R68	1-216-057-00	METAL CHIP	2.2K	5%	1/10W	
R69	1-216-025-00	METAL CHIP	100	5%	1/10W	
R70	1-216-025-00	METAL CHIP	100	5%	1/10W	
R71	1-216-089-11	METAL CHIP	47K	5%	1/10W	
R72	1-216-073-00	METAL CHIP	10K	5%	1/10W	
R73	1-216-073-00	METAL CHIP	10K	5%	1/10W	
R74	1-216-013-00	METAL CHIP	33	5%	1/10W	
R75	1-216-061-00	METAL CHIP	3.3K	5%	1/10W	
		< VARIABLE RESISTOR >				
RV51	1-238-601-11	RES, ADJ, CARBON	22K			
RV52	1-238-601-11	RES, ADJ, CARBON	22K			
RV53	1-238-598-11	RES, ADJ, CARBON	2.2K			
		< CONNECTOR >				
TP51	1-564-505-11	PLUG, CONNECTOR	2P			
		< VIBRATOR >				
X21	1-579-585-11	VIBRATOR, CRYSTAL (7.2MHz)				
X51	1-577-075-11	OSCILLATOR, CERAMIC (456kHz)				

****

* A-4303-461-A TCB015 BOARD, COMPLETE (EXCEPT AEP, UK)

****

< CAPACITOR >

C1	1-126-934-11	ELECT	220uF	20%	16V
C2	1-163-031-11	CERAMIC CHIP	0.01uF		50V
C3	1-163-009-11	CERAMIC CHIP	1000PF	10%	50V
C5	1-163-033-00	CERAMIC CHIP	0.022uF		50V
C6	1-163-091-00	CERAMIC CHIP	8PF	0.25PF	50V
C7	1-163-227-11	CERAMIC CHIP	10PF	0.5PF	50V
C12	1-164-343-11	CERAMIC CHIP	0.056uF	10%	25V
C13	1-163-033-11	CERAMIC CHIP	0.022uF		50V
C14	1-163-088-00	CERAMIC CHIP	5PF	0.25PF	50V
C21	1-163-099-00	CERAMIC CHIP	18PF	5%	50V
C22	1-163-099-00	CERAMIC CHIP	18PF	5%	50V
C23	1-163-031-11	CERAMIC CHIP	0.01uF		50V
C24	1-163-031-11	CERAMIC CHIP	0.01uF		50V
C25	1-163-031-11	CERAMIC CHIP	0.01uF		50V
C26	1-164-346-11	CERAMIC CHIP	1uF		16V
C27	1-124-257-00	ELECT	2.2uF	20%	50V
C28	1-163-031-11	CERAMIC CHIP	0.01uF		50V
C29	1-163-031-11	CERAMIC CHIP	0.01uF		50V
C31	1-124-257-00	ELECT	2.2uF	20%	50V
C32	1-163-031-11	CERAMIC CHIP	0.01uF		50V
C33	1-163-038-00	CERAMIC CHIP	0.1uF		25V

TCB015

Ref. No.	Part No.	Description			Remark
C34	1-163-038-00	CERAMIC CHIP	0.1uF		25V
C51	1-163-031-11	CERAMIC CHIP	0.01uF		50V
C52	1-126-162-11	ELECT	3.3uF	20%	50V
C53	1-163-031-11	CERAMIC CHIP	0.01uF		50V
C54	1-163-031-11	CERAMIC CHIP	0.01uF		50V
C55	1-163-105-00	CERAMIC CHIP	33PF	5%	50V
C57	1-164-346-11	CERAMIC CHIP	1uF		16V
C58	1-164-346-11	CERAMIC CHIP	1uF		16V
C59	1-164-346-11	CERAMIC CHIP	1uF		16V
C60	1-163-038-00	CERAMIC CHIP	0.1uF		25V
C61	1-163-022-00	CERAMIC CHIP	0.012uF	10%	50V
C62	1-163-022-00	CERAMIC CHIP	0.012uF	10%	50V
C63	1-126-301-11	ELECT	1uF	20%	50V
C64	1-126-301-11	ELECT	1uF	20%	50V
C65	1-126-301-11	ELECT	1uF	20%	50V
C66	1-126-301-11	ELECT	1uF	20%	50V
C70	1-163-031-11	CERAMIC CHIP	0.01uF		50V
C71	1-163-031-11	CERAMIC CHIP	0.01uF		50V
C72	1-126-934-11	ELECT	220uF	20%	16V
C73	1-124-257-00	ELECT	2.2uF	20%	50V
C74	1-163-031-11	CERAMIC CHIP	0.01uF		50V
C75	1-126-157-11	ELECT	10uF	20%	16V
C76	1-126-933-11	ELECT	100uF	20%	16V
C77	1-163-117-00	CERAMIC CHIP	100PF	5%	50V
C78	1-163-031-11	CERAMIC CHIP	0.01uF		50V
C79	1-126-157-11	ELECT	10uF	20%	16V
C80	1-126-925-11	ELECT	470uF	20%	10V
C81	1-163-031-11	CERAMIC CHIP	0.01uF		50V
C82	1-163-031-11	CERAMIC CHIP	0.01uF		50V
C86	1-163-016-00	CERAMIC CHIP	3900PF	10%	50V
C87	1-163-016-00	CERAMIC CHIP	3900PF	10%	50V
		< FILTER >			
CF1	1-567-389-11	FILTER, CERAMIC (10.7MHz)			
CF51	1-567-389-11	FILTER, CERAMIC (10.7MHz)			
		< TERMINAL >			
* CN3	1-537-613-11	TERMINAL (8P)			
		< VARIABLE CAPACITOR >			
CV1	1-141-227-00	CAP, TRIMMER (SW TRACKING)			
CV2	1-141-227-00	CAP, TRIMMER (SW CONTROL VOLTAGE)			
		< DIODE >			
D1	8-719-976-30	DIODE	KV1560N		
D21	8-719-422-46	DIODE	MA8056		
D51	8-719-016-74	DIODE	1SS352		

Ref. No.	Part No.	Description			Remark
		< FRONT END >			
FE1	1-465-673-11	FRONT END (2 BAND) (FM)			
FE2	1-239-262-11	ESCAPSULATED COMPONENT (AM)			
		< IC >			
IC21	8-759-821-43	IC	LC7218M		
IC51	8-759-823-68	IC	LA1851NM		
		< TRANSFORMER >			
IFT51	1-406-821-11	COIL (DISCRIMINATOR) (NULL)			
IFT52	1-404-713-11	TRANSFORMER, IF (MW/LW)			
		< JUMPER RESISTOR >			
JW1	1-216-295-00	METAL CHIP	0	5%	1/10W
JW2	1-216-295-00	METAL CHIP	0	5%	1/10W
JW3	1-216-295-00	METAL CHIP	0	5%	1/10W
JW6	1-216-295-00	METAL CHIP	0	5%	1/10W
		< COIL >			
L51	1-408-798-00	CHIP INDUCTOR 1MMH			
		< FILTER >			
LPF51	1-239-597-11	FILTER, LOW PASS			
LPF52	1-239-597-11	FILTER, LOW PASS			
		< TRANSISTOR >			
Q1	8-729-804-72	TRANSISTOR	2SC2814-F4		
Q3	8-729-810-16	TRANSISTOR	2SA1678		
Q4	8-729-602-36	TRANSISTOR	2SA1602-F		
Q5	8-729-602-36	TRANSISTOR	2SA1602-F		
Q6	8-729-810-28	TRANSISTOR	2SC4398		
Q7	8-729-810-28	TRANSISTOR	2SC4398		
Q21	8-729-602-21	TRANSISTOR	2SC4154-F		
Q22	8-729-232-69	TRANSISTOR	2SK208GR3		
Q23	8-729-232-59	TRANSISTOR	2SC4666B		
Q51	8-729-602-21	TRANSISTOR	2SC4154-F		
Q52	8-729-602-21	TRANSISTOR	2SC4154-F		
Q53	8-729-810-28	TRANSISTOR	2SC4398		
		< RESISTOR >			
R1	1-216-037-00	METAL CHIP	330	5%	1/10W
R2	1-216-037-00	METAL CHIP	330	5%	1/10W
R3	1-216-109-00	METAL CHIP	330K	5%	1/10W
R4	1-216-037-00	METAL CHIP	330	5%	1/10W
R7	1-216-017-00	METAL CHIP	47	5%	1/10W
R8	1-216-073-00	METAL CHIP	10K	5%	1/10W
R9	1-216-089-11	METAL CHIP	47K	5%	1/10W

Ref. No.	Part No.	Description			Remark
R10	1-216-097-11	METAL CHIP	100K	5%	1/10W
R16	1-216-073-00	METAL CHIP	10K	5%	1/10W
R17	1-216-121-00	METAL CHIP	1M	5%	1/10W
R18	1-216-073-00	METAL CHIP	10K	5%	1/10W
R21	1-216-049-00	METAL CHIP	1K	5%	1/10W
R22	1-216-049-00	METAL CHIP	1K	5%	1/10W
R23	1-216-049-00	METAL CHIP	1K	5%	1/10W
R24	1-216-025-00	METAL CHIP	100	5%	1/10W
R25	1-216-065-00	METAL CHIP	4.7K	5%	1/10W
R26	1-216-049-00	METAL CHIP	1K	5%	1/10W
R27	1-216-073-00	METAL CHIP	10K	5%	1/10W
R28	1-216-073-00	METAL CHIP	10K	5%	1/10W
R29	1-216-025-00	METAL CHIP	100	5%	1/10W
R30	1-216-061-00	METAL CHIP	3.3K	5%	1/10W
R31	1-216-043-00	METAL CHIP	560	5%	1/10W
R32	1-216-049-00	METAL CHIP	1K	5%	1/10W
R33	1-216-035-00	METAL CHIP	270	5%	1/10W
R34	1-216-065-00	METAL CHIP	4.7K	5%	1/10W
R35	1-216-057-00	METAL CHIP	2.2K	5%	1/10W
R36	1-216-065-00	METAL CHIP	4.7K	5%	1/10W
R37	1-216-065-00	METAL CHIP	4.7K	5%	1/10W
R38	1-216-025-00	METAL CHIP	100	5%	1/10W
R51	1-216-049-00	METAL CHIP	1K	5%	1/10W
R52	1-216-081-00	METAL CHIP	22K	5%	1/10W
R53	1-216-085-00	METAL CHIP	33K	5%	1/10W
R54	1-216-071-00	METAL CHIP	8.2K	5%	1/10W
R55	1-216-075-00	METAL CHIP	12K	5%	1/10W
R57	1-216-073-00	METAL CHIP	10K	5%	1/10W
R58	1-216-066-00	METAL CHIP	5.1K	5%	1/10W
R59	1-216-065-00	METAL CHIP	4.7K	5%	1/10W
R60	1-216-065-00	METAL CHIP	4.7K	5%	1/10W
R61	1-216-115-00	METAL CHIP	560K	5%	1/10W
R62	1-216-115-00	METAL CHIP	560K	5%	1/10W
R63	1-216-049-00	METAL CHIP	1K	5%	1/10W
R64	1-216-049-00	METAL CHIP	1K	5%	1/10W
R65	1-216-073-00	METAL CHIP	10K	5%	1/10W
R66	1-216-073-00	METAL CHIP	10K	5%	1/10W
R67	1-216-057-00	METAL CHIP	2.2K	5%	1/10W
R68	1-216-057-00	METAL CHIP	2.2K	5%	1/10W
R69	1-216-025-00	METAL CHIP	100	5%	1/10W
R70	1-216-025-00	METAL CHIP	100	5%	1/10W
R71	1-216-089-11	METAL CHIP	47K	5%	1/10W
R72	1-216-073-00	METAL CHIP	10K	5%	1/10W
R73	1-216-073-00	METAL CHIP	10K	5%	1/10W
R74	1-216-013-00	METAL CHIP	33	5%	1/10W

Ref. No.	Part No.	Description	Remark
		< VARIABLE RESISTOR >	
RV51	1-238-601-11	RES, ADJ, CARBON 22K (FM TUNED IND. LEVEL)	
RV52	1-238-601-11	RES, ADJ, CARBON 22K (AM TUNED IND. LEVEL)	
RV53	1-238-598-11	RES, ADJ, CARBON 2.2K (SEPARATION)	
		< COIL >	
T1	1-402-424-11	COIL (ANT, SW3)	
T2	1-406-346-11	COIL (OSC, SW3)	
		< CONNECTOR >	
TP51	1-564-505-11	PLUG, CONNECTOR 2P	
		< VIBRATOR >	
X21	1-579-585-11	VIBRATOR, CRYSTAL (7.2MHz)	
X51	1-577-075-11	OSCILLATOR, CERAMIC (456kHz)	
**********			
*	1-649-676-13	TRANSFORMER BOARD **********	
		< CAPACITOR >	
C801	1-126-948-11	ELECT 100uF 20% 35V	
C802	1-124-122-11	ELECT 100uF 20% 50V	
C803	1-124-122-11	ELECT 100uF 20% 50V	
C804	1-124-122-11	ELECT 100uF 20% 50V	
C805	1-164-004-11	CERAMIC CHIP 0.1uF 10% 25V	
C810	1-164-004-11	CERAMIC CHIP 0.1uF 10% 25V	
		< CONNECTOR >	
* CN801	1-568-852-11	SOCKET, CONNECTOR 9P	
		< DIODE >	
D801	8-719-200-02	DIODE 10E2	
D802	8-719-200-02	DIODE 10E2	
D803	8-719-200-02	DIODE 10E2	
D804	8-719-021-23	DIODE UZM4.7B	
D805	8-719-934-22	HZS30-2L	
		< FUSE >	
⚠F801	1-532-839-11	LINK, IC (1.0A)	
⚠F802	1-532-839-11	LINK, IC (1.0A)	
		< TRANSISTOR >	
Q801	8-729-804-41	TRANSISTOR 2SB1122-S	

The components identified by mark ⚠ or dotted line with mark. ⚠ are critical for safety. Replace only with part number specified.

TRANSFORMER

Ref. No.	Part No.	Description			Remark
		< RESISTOR >			
R802	1-216-097-00	METAL CHIP	100K	5%	1/10W
R803	1-216-041-00	METAL CHIP	470	5%	1/10W
R804	1-216-041-00	METAL CHIP	470	5%	1/10W
R805	1-216-067-00	METAL CHIP	5.6K	5%	1/10W
R806	1-216-067-00	METAL CHIP	5.6K	5%	1/10W
R812	1-216-073-00	METAL CHIP	10K	5%	1/10W
		< TRANSFORMER >			
⚠T801	1-423-841-11	TRANSFORMER, POWER			
**********					
		MISCELLANEOUS			
		**********			
16	1-751-981-11	WIRE (FLAT TYPE) (13 CORE)			
18	1-690-753-11	WIRE (FLAT TYPE) (22 CORE)			
19	1-751-980-11	WIRE (FLAT TYPE) (9 CORE)			
* 161	1-452-538-11	MAGNET			
⚠201	8-848-144-11	DEVICE, OPTICAL KSS-240A			
202	1-575-001-11	WIRE, FLAT TYPE (12 CORE)			
M101	X-4917-504-1	MOTOR ASSY (SLED)			
M102	X-4917-523-3	MOTOR ASSY (SPINDLE)			
M191	A-4604-363-A	MOTOR (L) ASSY			
**********					
		**********			
		HARDWARE LIST			
		**********			
#1	7-682-547-09	SCREW +BVTT 3X6 (S)			
#2	7-685-646-79	SCREW +BVTP 3X8 TYPE2 N-S			
#3	7-621-849-00	SCREW, TAPPING			
#4	7-621-775-10	SCREW +B 2.6X4			
#5	7-685-134-19	SCREW +BTP 2.6X8 TYPE2 N-S			
#6	7-621-255-15	SCREW +P 2X3			

The components identified by mark ⚠ or dotted line with mark. ⚠ are critical for safety. Replace only with part number specified.

English
94E0575-1
Printed in Japan
© 1994. 5

9-959-582-11

Sony Corporation
Consumer A&V Products Company
Home A&V Products Div.

Published by Home A&V Products Div.
Quality Engineering Dept.